US007084919B2

(12) **United States Patent**
Shibata et al.

(10) **Patent No.: US 7,084,919 B2**
(45) **Date of Patent: Aug. 1, 2006**

(54) **PORTABLE TERMINAL WITH ROTATABLE AXIAL FLIP UNIT AND DUAL LENS ARRANGEMENT**

(75) Inventors: **Junichiro Shibata**, Tokyo (JP); **Shuuji Yamaguchi**, Tokyo (JP)

(73) Assignee: **NEC Corporation**, Tokyo (JP)

(*) Notice: Subject to any disclaimer, the term of this patent is extended or adjusted under 35 U.S.C. 154(b) by 902 days.

(21) Appl. No.: **09/733,984**

(22) Filed: **Dec. 12, 2000**

(65) **Prior Publication Data**

US 2001/0004269 A1 Jun. 21, 2001

(30) **Foreign Application Priority Data**

Dec. 14, 1999 (JP) 11-354459

(51) **Int. Cl.**
H04N 5/222 (2006.01)

(52) **U.S. Cl.** **348/333.06**; 348/335

(58) **Field of Classification Search** 348/207.99, 348/220.1, 333.01, 333.06, 333.07, 373, 348/374, 375, 376, 14, 15, 552, 335; 386/107, 386/117, 118; 708/115; 455/550, 556, 557
See application file for complete search history.

(56) **References Cited**

U.S. PATENT DOCUMENTS

5,719,799 A * 2/1998 Isashi 708/105
5,982,429 A * 11/1999 Kamamoto et al. 348/333.06
6,069,648 A * 5/2000 Suso et al. 348/14.02
6,510,325 B1 * 1/2003 Mack et al. 455/575.2
6,697,117 B1 * 2/2004 Park 348/373
6,750,848 B1 * 6/2004 Pryor 345/168

FOREIGN PATENT DOCUMENTS

JP 06-292195 10/1994
JP 08-22343 A 1/1996
JP 11-69214 A 3/1999

* cited by examiner

Primary Examiner—Tuan Ho
(74) *Attorney, Agent, or Firm*—Sughrue Mion, PLLC

(57) **ABSTRACT**

This portable terminal comprises a main unit having a microphone, a key operation unit, and a radio sending/receiving function of image and sound, a rotation axial unit having a video camera and an operation dial, an image display unit with a touch panel capable of displaying an image taken by the video camera, a received image and a screen for input operation, and a flip unit having the image display unit, a CCD camera, a speaker and an operation button. The rotation axial unit further includes an opening/shutting axis for connecting the main unit and the flip unit in a mutually rotatable way and a rotation axis for connecting the flip unit in a way of rotating the flip unit across the above rotation in the horizontal direction, and when the flip unit is opened and rotated across, it is used as a video camera with a monitor.
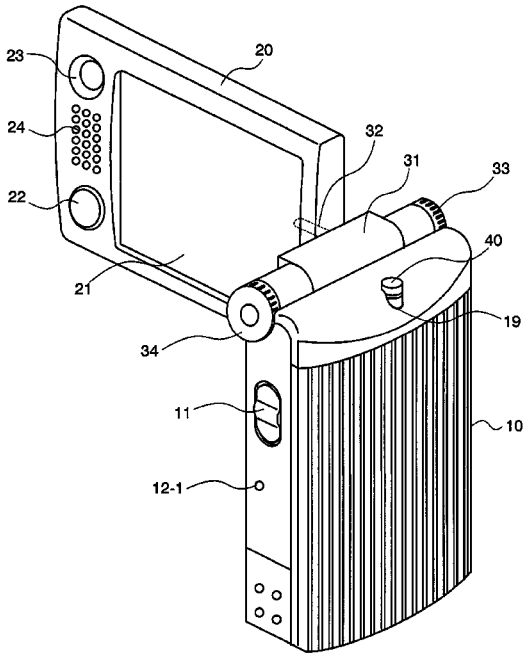
47 Claims, 11 Drawing Sheets