Feb. 14, 1961 W. WILLSON 2,971,519

COMBINED DINING TABLE AND DISHWASHER

Filed Aug. 6, 1957 2 Sheets-Sheet 1

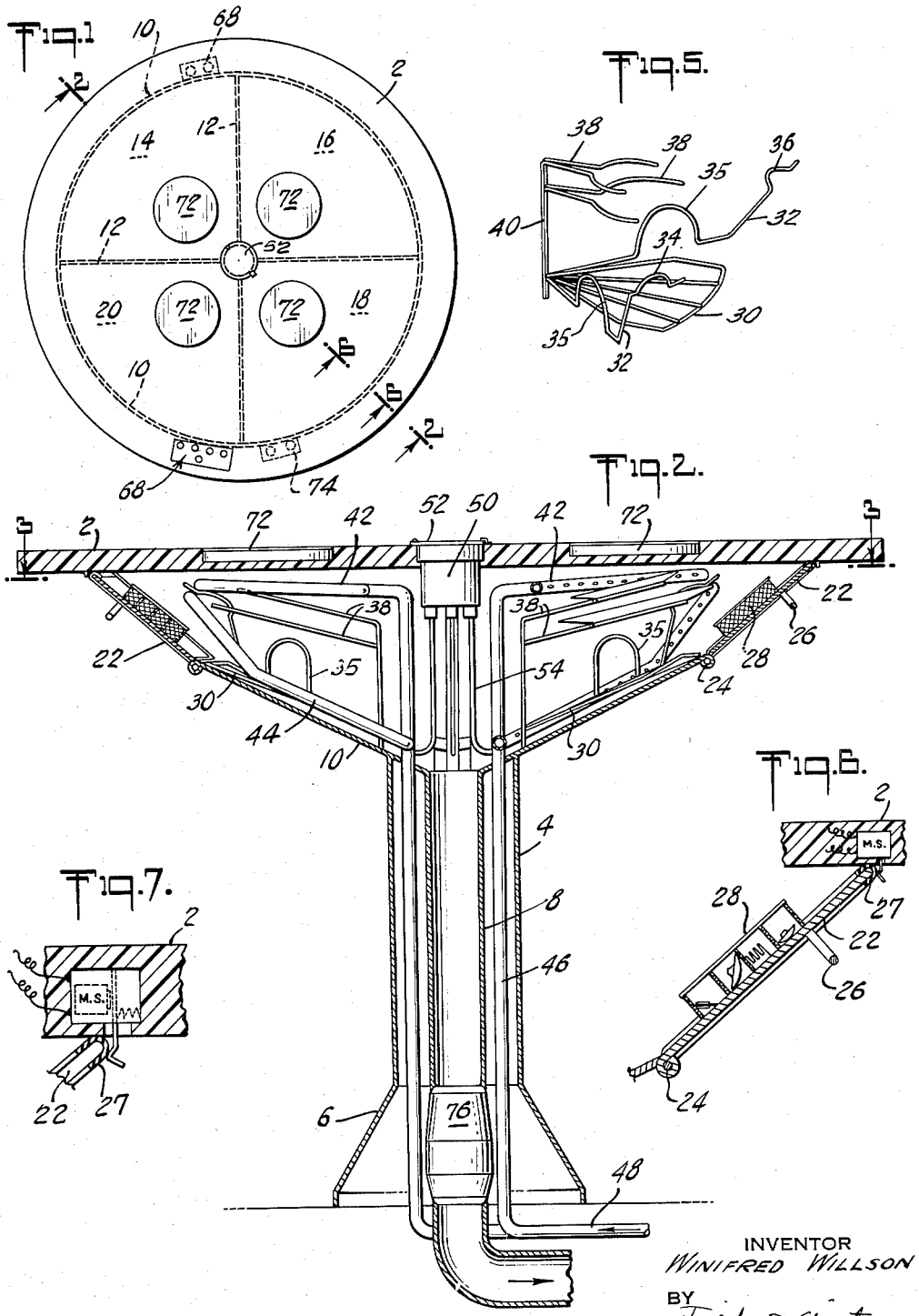

INVENTOR
WINIFRED WILLSON
BY
Fisher & Christen,
ATTORNEYS.