ANTENNA SYSTEM FOR PROXIMITY CONTROL

Filed Nov. 17, 1967 3 Sheets-Sheet 1

FIG. 2

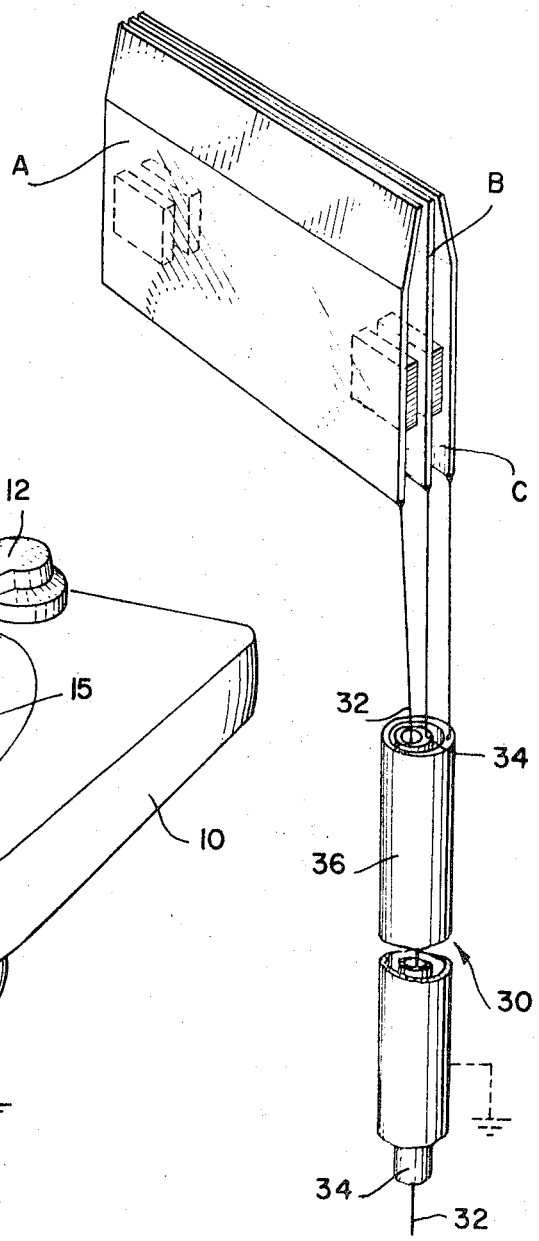

FIG. 1

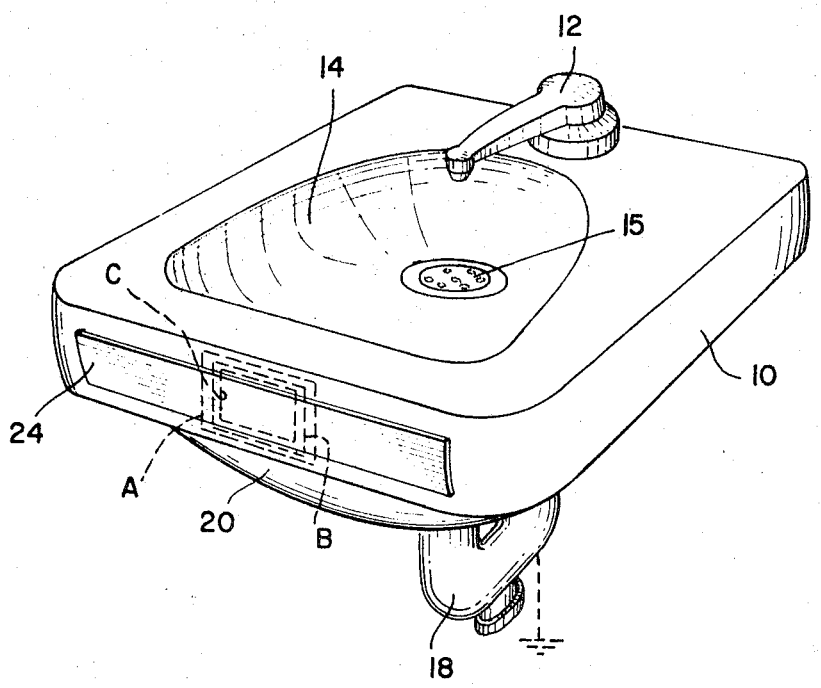

INVENTOR.
NORMAN A. FORBES