EXTENSIBLE PAINT ROLLER

Filed May 1, 1964 2 Sheets-Sheet 2

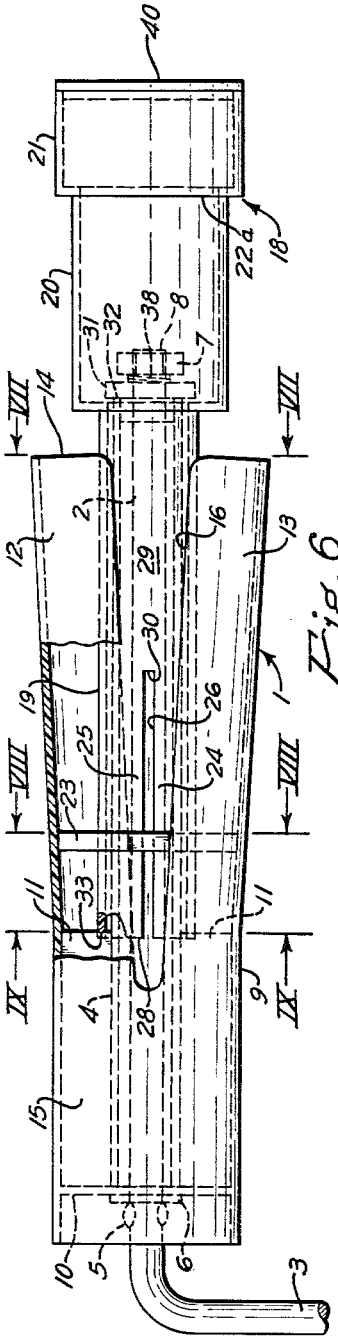

Fig. 6

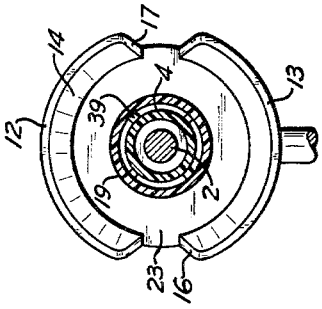

Fig. 7

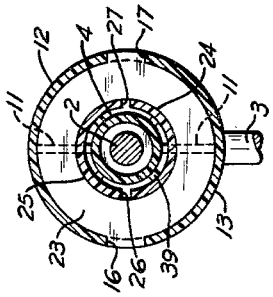

Fig. 8

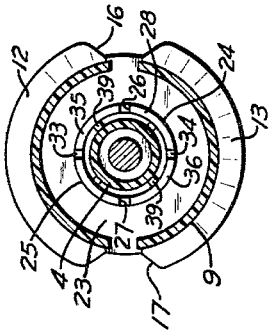

Fig. 9

INVENTOR.
DANIEL A. GOETZ
BY
Webb, Burden, Robinson & Webb
ATTORNEYS.