US008126519B2

(12) **United States Patent**
Matsuoka

(10) **Patent No.: US 8,126,519 B2**
(45) **Date of Patent: Feb. 28, 2012**

(54) **HOUSING FOR MOBILE COMPUTING DEVICE HAVING CONSTRUCTION TO SLIDE AND PIVOT INTO MULTIPLE POSITIONS**

(75) Inventor: **Yoshimichi Matsuoka**, Cupertino, CA (US)

(73) Assignee: **Hewlett-Packard Development Company, L.P.**, Houston, TX (US)

(*) Notice: Subject to any disclaimer, the term of this patent is extended or adjusted under 35 U.S.C. 154(b) by 1215 days.

(21) Appl. No.: **11/849,175**

(22) Filed: **Aug. 31, 2007**

(65) **Prior Publication Data**

US 2009/0061956 A1 Mar. 5, 2009

(51) **Int. Cl.**
H04M 1/00 (2006.01)

(52) **U.S. Cl.** **455/575.3**; 455/575.4

(58) **Field of Classification Search** ..... 455/575.4, 455/575.1, 575.3, 566, 550.1; 361/681; D14/138 AB, 138 AC, 181, 257
See application file for complete search history.

(56) **References Cited**

U.S. PATENT DOCUMENTS

4,279,021	A	7/1981	See et al.
4,415,065	A	11/1983	Sandstedt
4,587,630	A	5/1986	Straton et al.
4,725,694	A	2/1988	Auer et al.
4,764,770	A	8/1988	Church
4,887,212	A	12/1989	Zamora et al.
4,892,981	A	1/1990	Soloway et al.
4,916,441	A	4/1990	Gombrich
5,010,547	A	4/1991	Johnson et al.
5,012,219	A	4/1991	Henry
D320,598	S	10/1991	Auerbach et al.
5,067,164	A	11/1991	Denker et al.
5,075,684	A	12/1991	DeLuca
5,101,439	A	3/1992	Kiang
5,109,539	A	4/1992	Inubushi et al.
D326,451	S	5/1992	Roegner
5,218,188	A	6/1993	Hanson
5,227,614	A	7/1993	Danielson et al.
5,235,561	A	8/1993	Seager
5,307,086	A	4/1994	Griffin et al.
5,334,824	A	8/1994	Martinez
5,335,276	A	8/1994	Thompson et al.
5,336,001	A	8/1994	Lichtenberg
5,345,615	A	9/1994	Garofalo

(Continued)

FOREIGN PATENT DOCUMENTS

EP	0149762	*	7/1986

(Continued)

OTHER PUBLICATIONS

"3GPP2 Multimedia Messaging System—MMS Specification Overview—Revision: A. Mobile Messaging", May 2003, [online] [Retrieved on Dec. 10, 2004] Retrieved from the internet: URL: http://www.lebodic.net/left.htm.*

(Continued)

Primary Examiner — Dwayne Bost
Assistant Examiner — Inder Mehra

(57) **ABSTRACT**

A housing for a computing device is provided that includes a base segment and a frontal segment. The base segment and the frontal segment may be coupled to enable the frontal segment to slide between an extended and contracted position. Additionally, the base segment and the frontal segment may be pivotally engaged to enable the frontal segment to pivot 180 degrees (or thereabouts) when in the extended position, and then to slide from the pivoted position into the contracted position.
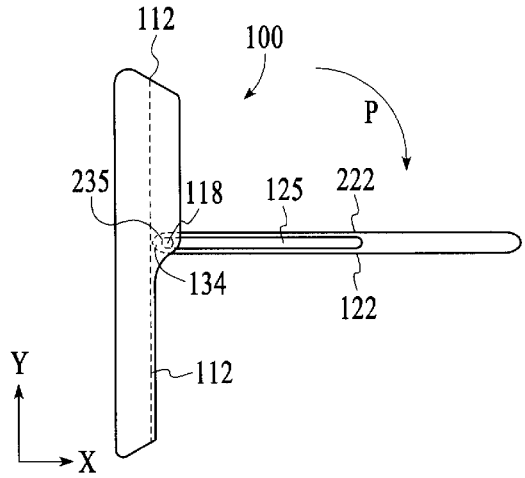
18 Claims, 5 Drawing Sheets