US006821819B1

(12) **United States Patent**
Benavides et al.

(10) **Patent No.: US 6,821,819 B1**
(45) **Date of Patent: Nov. 23, 2004**

(54) **METHOD OF PACKAGING AND ASSEMBLING MICRO-FLUIDIC DEVICE**

(75) Inventors: **Gilbert L. Benavides**, Albuquerque, NM (US); **Paul C. Galambos**, Albuquerque, NM (US); **John A. Emerson**, Albuquerque, NM (US); **Kenneth A. Peterson**, Albuquerque, NM (US); **Rachel K. Giunta**, Albuquerque, NM (US); **David Lee Zamora**, Albuquerque, NM (US); **Robert D. Watson**, Tijeras, NM (US)

(73) Assignee: **Sandia Corporation**, Albuquerque, MN (US)

(*) Notice: Subject to any disclaimer, the term of this patent is extended or adjusted under 35 U.S.C. 154(b) by 3 days.

(21) Appl. No.: **10/370,543**

(22) Filed: **Feb. 20, 2003**

Related U.S. Application Data

(62) Division of application No. 09/790,305, filed on Feb. 21, 2001, now Pat. No. 6,548,895.

(51) **Int. Cl.**[7] **H01L 21/44**; H01L 21/48; H01L 21/50; H01L 21/00

(52) **U.S. Cl.** **438/122**; 438/123; 438/124; 438/125; 438/127; 438/48; 438/54; 438/55

(58) **Field of Search** 438/122, 125, 438/123, 124, 127, 48, 54, 55, 121; 257/714, 715, 712, 713; 361/764

(56) **References Cited**

U.S. PATENT DOCUMENTS

5,766,740 A * 6/1998 Olson 428/209
6,178,630 B1 * 1/2001 Jimarez et al. 29/846
6,477,901 B1 * 11/2002 Tadigadapa et al. ... 73/861.352
6,664,104 B2 * 12/2003 Pourahmadi et al. 435/288.6

* cited by examiner

Primary Examiner—Nitin Parekh
(74) *Attorney, Agent, or Firm*—Robert D. Watson

(57) **ABSTRACT**

A new architecture for packaging surface micromachined electro-microfluidic devices is presented. This architecture relies on two scales of packaging to bring fluid to the device scale (picoliters) from the macro-scale (microliters). The architecture emulates and utilizes electronics packaging technology. The larger package consists of a circuit board with embedded fluidic channels and standard fluidic connectors (e.g. Fluidic Printed Wiring Board). The embedded channels connect to the smaller package, an Electro-Microfluidic Dual-Inline-Package (EMDIP) that takes fluid to the microfluidic integrated circuit (MIC). The fluidic connection is made to the back of the MIC through Bosch-etched holes that take fluid to surface micromachined channels on the front of the MIC. Electrical connection is made to bond pads on the front of the MIC.
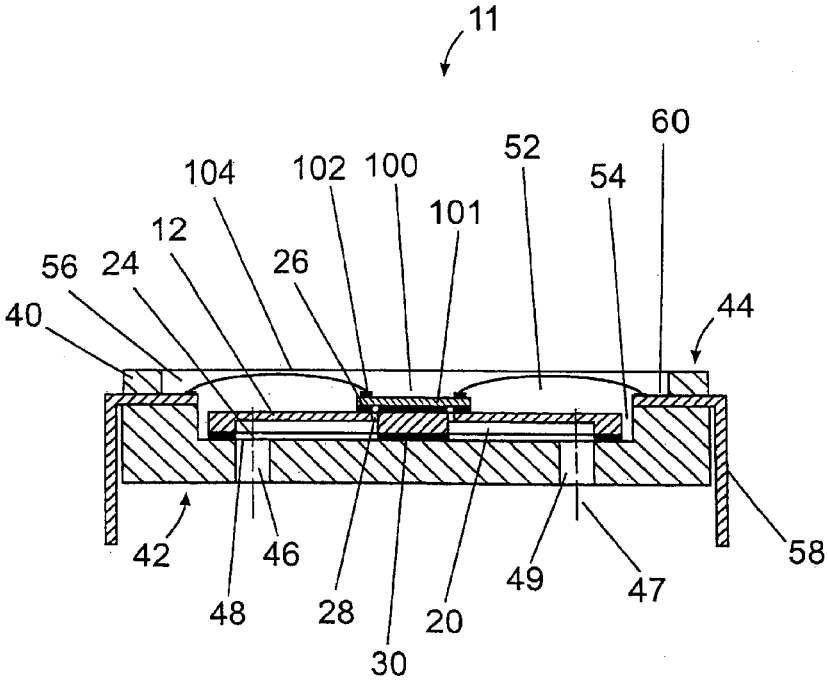
42 Claims, 33 Drawing Sheets