US005419319A

United States Patent [19]

Werner

[11] Patent Number: 5,419,319

[45] Date of Patent: May 30, 1995

[54] VARIABLE POSITION ENDOTRACHEAL TUBE HOLDER

[76] Inventor: Philip J. Werner, HC #1 Box 194E, Brodheadsville, Pa. 18322

[21] Appl. No.: 224,772

[22] Filed: Apr. 8, 1994

[51] Int. Cl.[6] A61M 16/04

[52] U.S. Cl. 128/207.17; 128/200.26; 128/207.14; 128/DIG. 26; 604/174

[58] Field of Search ..... 128/207.17, DIG. 26, 128/911, 912, 207.14, 200.24, 200.26; 604/174, 177, 178, 179, 250

[56] References Cited

U.S. PATENT DOCUMENTS

2,735,432	2/1956	Hudson .	
3,713,448	1/1973	Arrott .	
3,802,431	4/1974	Farr .	
3,946,742	3/1976	Eross	128/207.17
3,987,798	10/1976	McGinnis .	
4,223,671	9/1980	Muto .	
4,249,529	2/1981	Nestor et al. .	
4,270,529	6/1981	Muto .	
4,331,143	5/1982	Foster	128/207.17
4,483,337	11/1984	Clair .	
4,744,358	5/1988	McGinnis .	
4,906,234	3/1990	Voychehovski .	
5,009,227	4/1991	Nieuwstad .	
5,123,410	6/1992	Greene et al. .	
5,345,931	9/1994	Battaglia, Jr.	128/DIG. 26

FOREIGN PATENT DOCUMENTS

2244924	12/1991	United Kingdom	128/207.17

Primary Examiner—Edgar S. Burr
Assistant Examiner—William J. Deane, Jr.
Attorney, Agent, or Firm—Shoemaker and Mattare Ltd.

[57] ABSTRACT

A variable position endotracheal tube holder includes a face piece having an arcuate transverse portion adapted to pass between the nose and upper lip of the patient, and a pair of downwardly extending wings at either end of the transverse portion. The lateral portion of the face piece has upper and lower flanges protruding away from the patient's face, and defining a groove or way which receives and retains a movable support for holding the endotracheal tube. The support includes a slider which can be locked in various positions along the groove, and an integral tube hanger bracket extending downward to the tube.
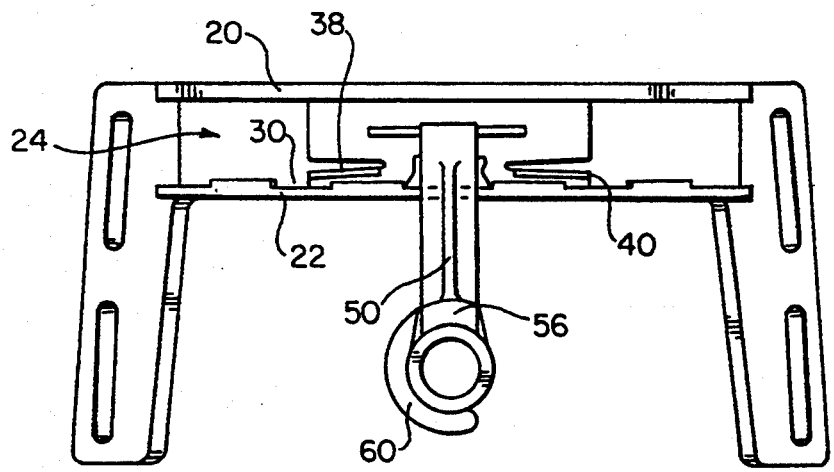
10 Claims, 2 Drawing Sheets