Dec. 10, 1968 W. R. JEWETT ET AL 3,415,419

FLUID ADMINISTERING SYSTEM

Filed Oct. 27, 1966 3 Sheets-Sheet 1

Fig. 1.

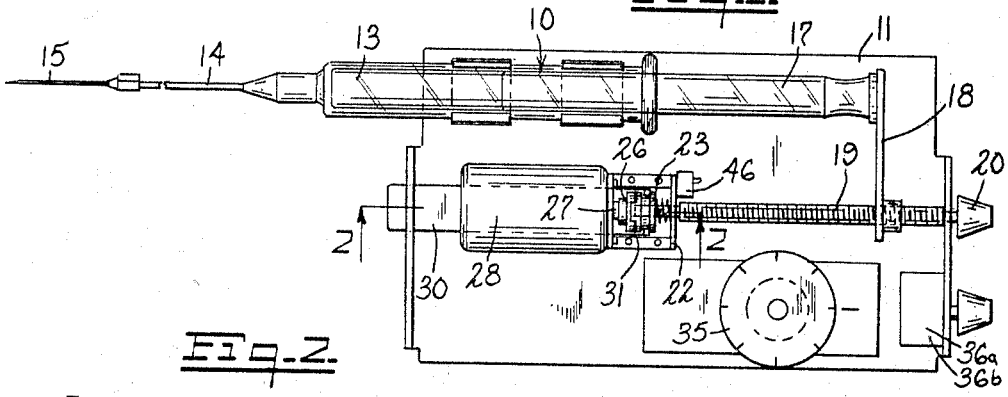

Fig. 2.

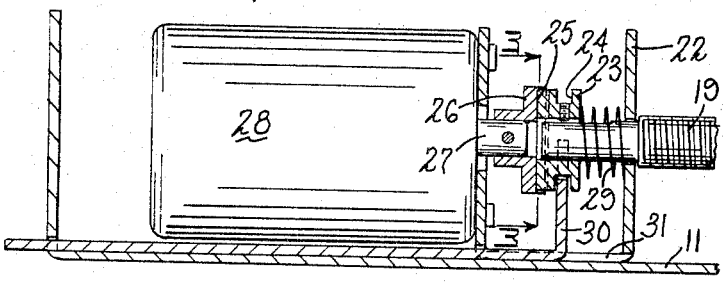

Fig. 3.

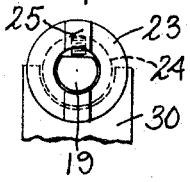

Fig. 6.

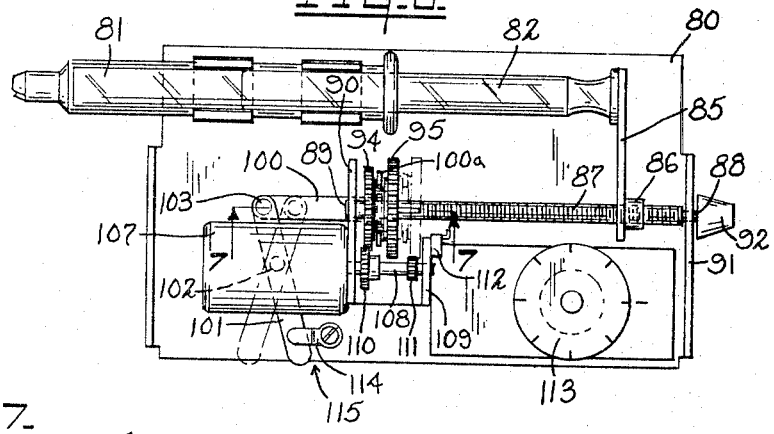

Fig. 7.

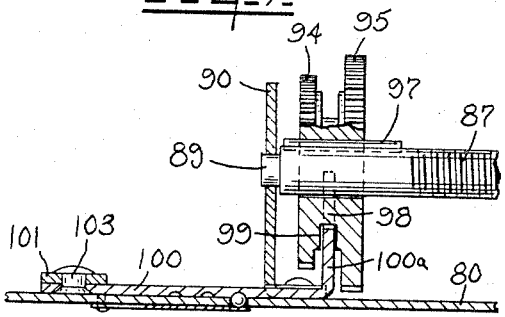

INVENTORS
Warren R. Jewett
Frank L. Petree
Walter C. Bialobrzeski
BY
DeLio and Montgomery
ATTORNEYS