June 4, 1974 J. E. MORGAN 3,814,819

HIGH PROTEIN FOOD BAR

Filed March 10. 1971

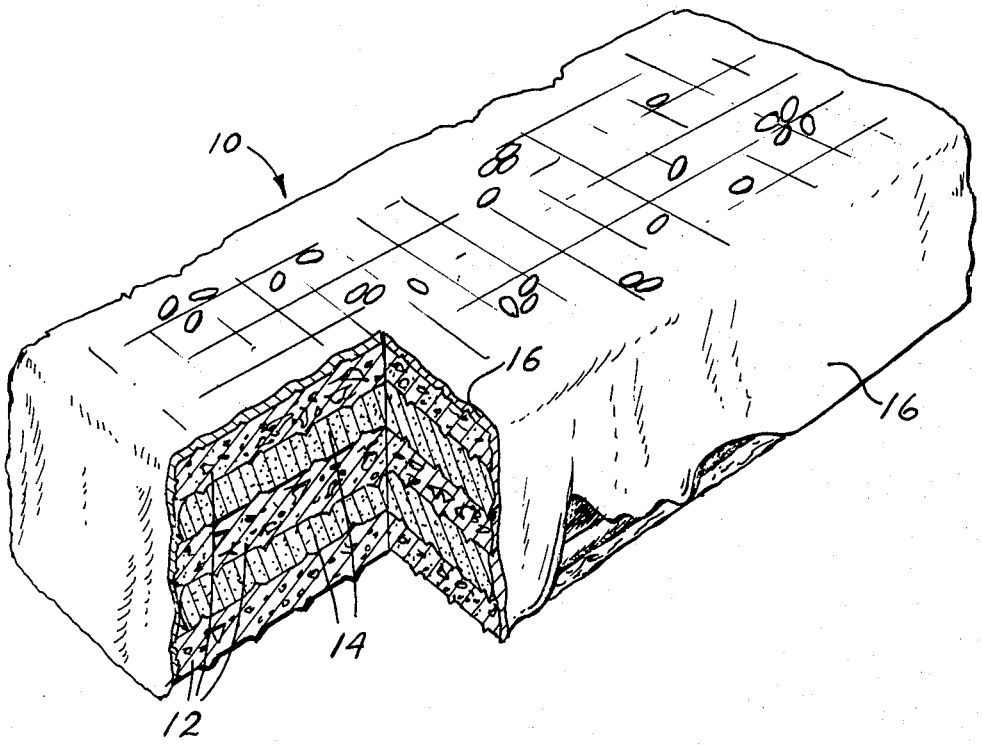

INVENTOR.
JAY E. MORGAN
BY
James V. Harmon
ATTORNEY