Fig. 1

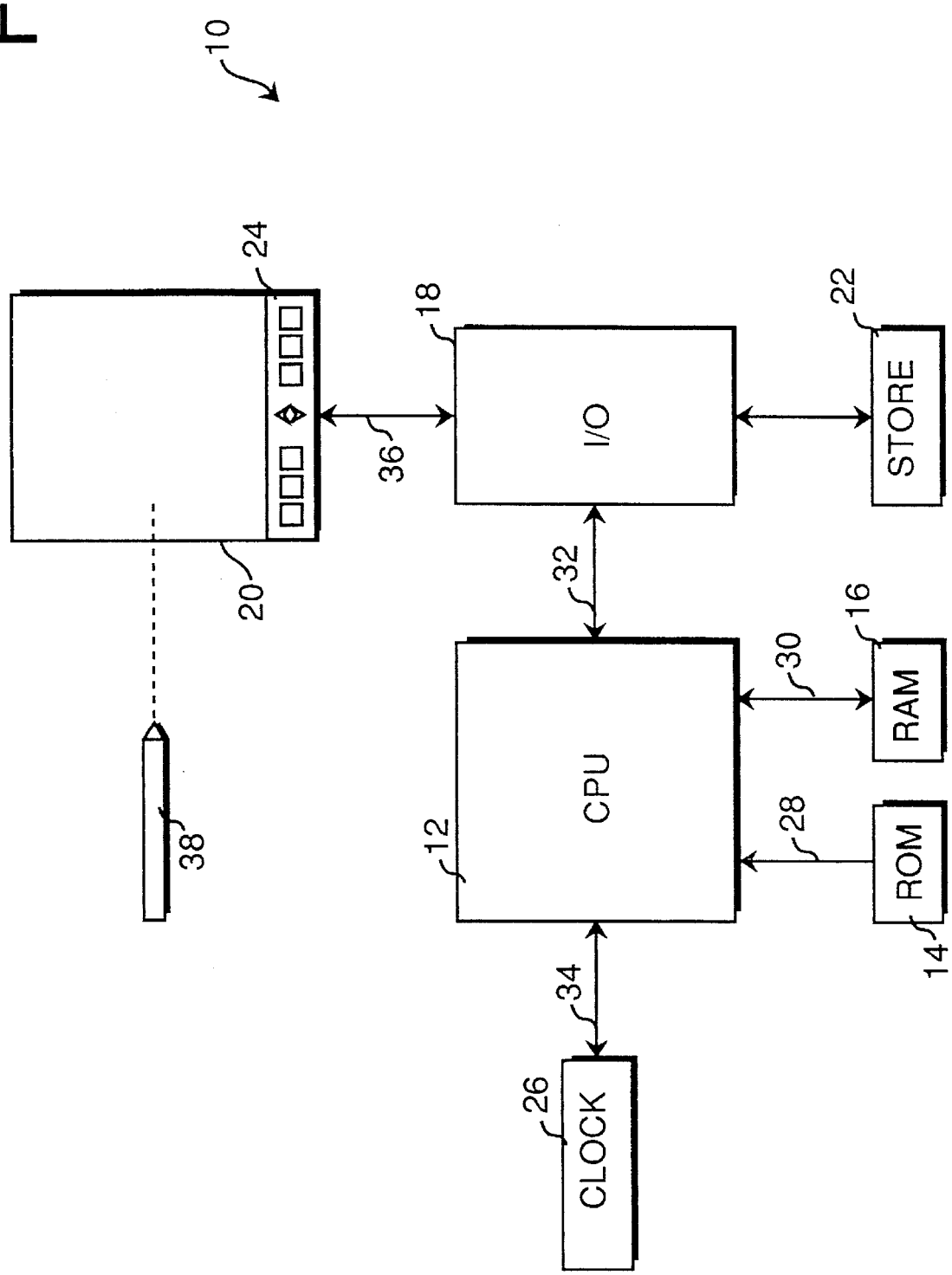
10
24
20
38
36
18
I/O
22
STORE
32
12
CPU
30
16
RAM
28
ROM
14
34
26
CLOCK