OR 3,312,519

April 4, 1967 E. MAX 3,312,519

WIDE RANGE HIGH SPEED ADJUSTABLE FOCUSING OF HIGH FREQUENCY ELECTROMAGNETIC RADIATION

Filed June 28, 1963 2 Sheets-Sheet 1

FIG.1

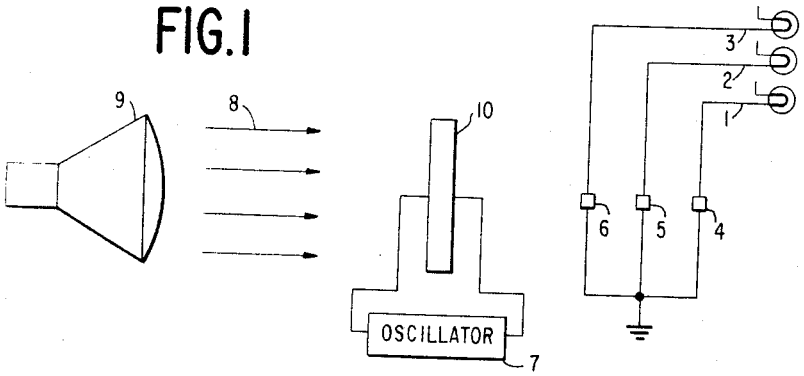

FIG.2

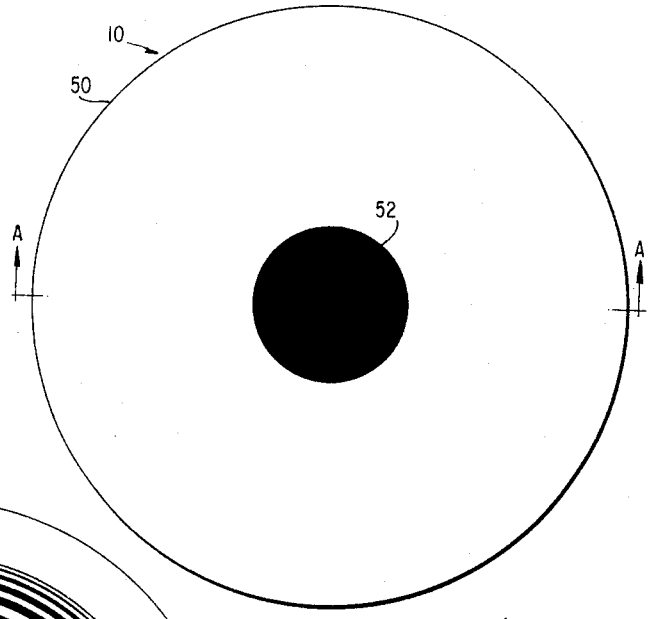

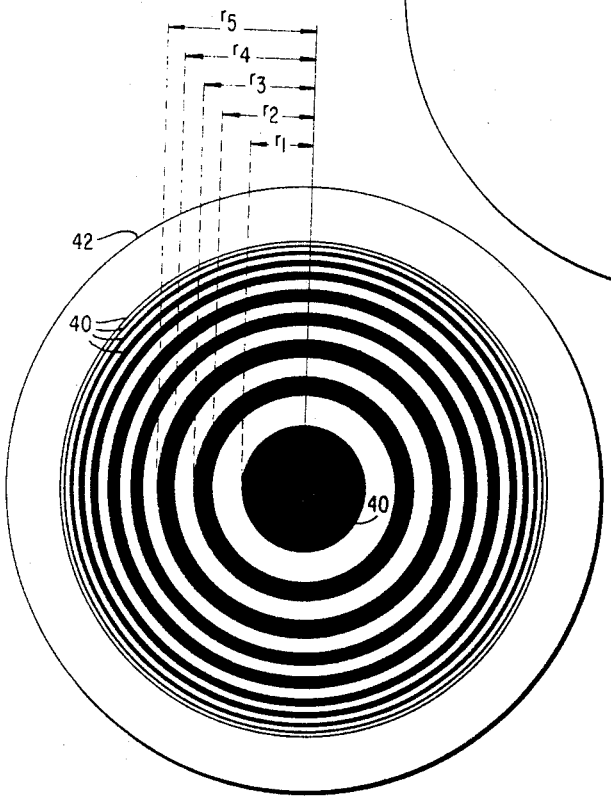

FIG.5

INVENTOR.
ERHARD MAX
BY Maurice H. Litzman
ATTORNEY