US009411019B2

(12) United States Patent
Hwang et al.

(10) Patent No.: US 9,411,019 B2
(45) Date of Patent: Aug. 9, 2016

(54) **METHOD AND SYSTEM FOR ESTIMATING STATE OF HEALTH OF BATTERY SET**

(71) Applicant: **Automotive Research & Testing Center**, Changhua County (TW)

(72) Inventors: **Bo-Han Hwang**, Changhua County (TW); **Kuo-Liang Weng**, Changhua County (TW); **Deng-He Lin**, Changhua County (TW)

(73) Assignee: **Automotive Research & Testing Center**, Changhua County (TW)

(*) Notice: Subject to any disclaimer, the term of this patent is extended or adjusted under 35 U.S.C. 154(b) by 400 days.

(21) Appl. No.: **14/108,318**

(22) Filed: **Dec. 16, 2013**

(65) **Prior Publication Data**

US 2015/0168498 A1 Jun. 18, 2015

(51) **Int. Cl.**
G01R 31/36 (2006.01)

(52) **U.S. Cl.**
CPC ***G01R 31/3624*** (2013.01); ***G01R 31/362*** (2013.01); ***G01R 31/3651*** (2013.01); ***G01R 31/3679*** (2013.01)

(58) **Field of Classification Search**
CPC H04L 67/12; H04L 63/08; H04L 67/10; H04L 67/26; Y10T 428/2982; Y10T 436/111666; Y10T 436/113332; Y10T 436/2575; G01R 31/3606; G01R 31/3634; G01R 31/3651; G01R 31/3675; G01R 31/3679
See application file for complete search history.

(56) **References Cited**

U.S. PATENT DOCUMENTS

7,548,821	B2	6/2009	Tae et al.	
8,427,112	B2	4/2013	Ghantous et al.	
2007/0194791	A1*	8/2007	Huang	G01R 31/3662 324/430
2012/0022816	A1*	1/2012	Zenati	G01R 31/3624 702/63
2013/0158912	A1	6/2013	Yen et al.	
2014/0278169	A1*	9/2014	Kim	G01R 31/362 702/63

FOREIGN PATENT DOCUMENTS

CN	101071160 B	5/2010
CN	102073016 A	5/2011
TW	I267647	12/2006
TW	I331417	10/2010
TW	201323905	6/2013
TW	I398660	6/2013
TW	201326862	7/2013

* cited by examiner

Primary Examiner — Roy Y Yi
(74) *Attorney, Agent, or Firm* — CKC & Partners Co., Ltd.

(57) **ABSTRACT**

A method and a system for estimating the State of Health (SOH) of a battery set are disclosed. The method utilizes a discrete quantization algorithm to estimate the SOH of the battery set, wherein the voltage standard deviations are calculated according to the loop voltages of the battery cells, and comparing the rated discharge capacity with the voltage standard deviations for estimating the SOH of the battery set.
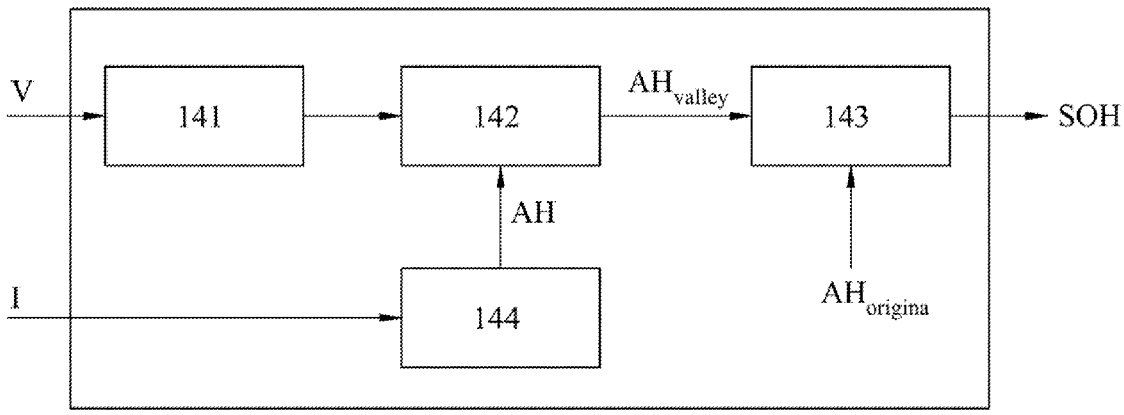
11 Claims, 4 Drawing Sheets