US009410919B2

(12) **United States Patent**
Spong et al.

(10) **Patent No.: US 9,410,919 B2**
(45) **Date of Patent: Aug. 9, 2016**

(54) **ELECTROCHEMICAL GAS DETECTOR WITH CARBON ELEMENT**

(71) Applicant: **LIFE SAFETY DISTRIBUTION AG**, Uster (CH)

(72) Inventors: **Alan Daniel Spong**, Hedge End (GB); **John Chapples**, Portsmouth (GB); **Neils Richard Stewart Hansen**, Poole (GB)

(73) Assignee: **Honeywell International Inc.**, Morris Plains, NJ (US)

(*) Notice: Subject to any disclaimer, the term of this patent is extended or adjusted under 35 U.S.C. 154(b) by 528 days.

(21) Appl. No.: **13/901,090**

(22) Filed: **May 23, 2013**

(65) **Prior Publication Data**

US 2013/0319858 A1 Dec. 5, 2013

Related U.S. Application Data

(60) Provisional application No. 61/653,508, filed on May 31, 2012.

(51) **Int. Cl.**
G01N 27/403 (2006.01)
G01N 27/404 (2006.01)

(52) **U.S. Cl.**
CPC ***G01N 27/403*** (2013.01); ***G01N 27/404*** (2013.01)

(58) **Field of Classification Search**
CPC G01N 27/403; G01N 27/404
USPC 204/430–432
See application file for complete search history.

(56) **References Cited**

U.S. PATENT DOCUMENTS

4,988,582	A *	1/1991	Dyer	H01M 8/1002 29/623.5
7,931,788	B1 *	4/2011	Wilkins	G01N 33/5438 204/403.01
2002/0125131	A1 *	9/2002	Babes-Dornea	G01N 27/4045 204/415
2003/0087156	A1 *	5/2003	Broman	H01M 4/8615 429/235
2003/0209442	A1 *	11/2003	Harper	G01N 27/4045 205/108
2008/0096075	A1 *	4/2008	Lundblad	C25B 9/10 429/492

OTHER PUBLICATIONS

Lux et al. (J. Electrochem. Soc, 159/11, A1849-A1855, published Sep. 11, 2012).*

* cited by examiner

Primary Examiner — Luan Van
Assistant Examiner — Steven Rosenwald
(74) *Attorney, Agent, or Firm* — Conley Rose, P.C.; Kristin Jordan Harkins

(57) **ABSTRACT**

An electrochemical detector includes a carbon based element located between a separator and a current collector of an adjacent electrode. Elements can take the form of a carbon fabric located between the separator and the collector, or a linear, or, circular carbon deposit on a surface of the separator adjacent to the respective current collector. Other conductive coatings including gold, platinum or transition metals, as well as carbon, can be deposited directly onto a porous substrate, such as a masked separator material.
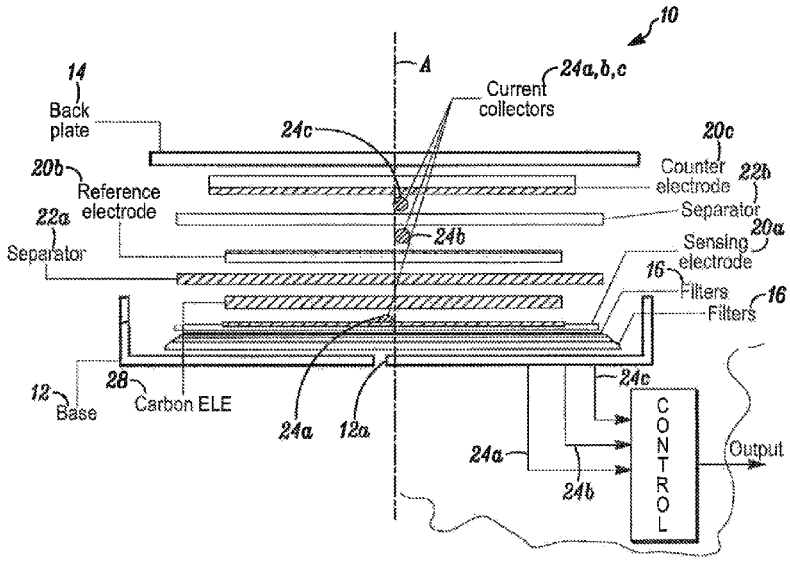
15 Claims, 2 Drawing Sheets