Feb. 21, 1967 F. J. REYNOLDS 3,305,119

RECLOSURE CAPS

Filed Feb. 12, 1965

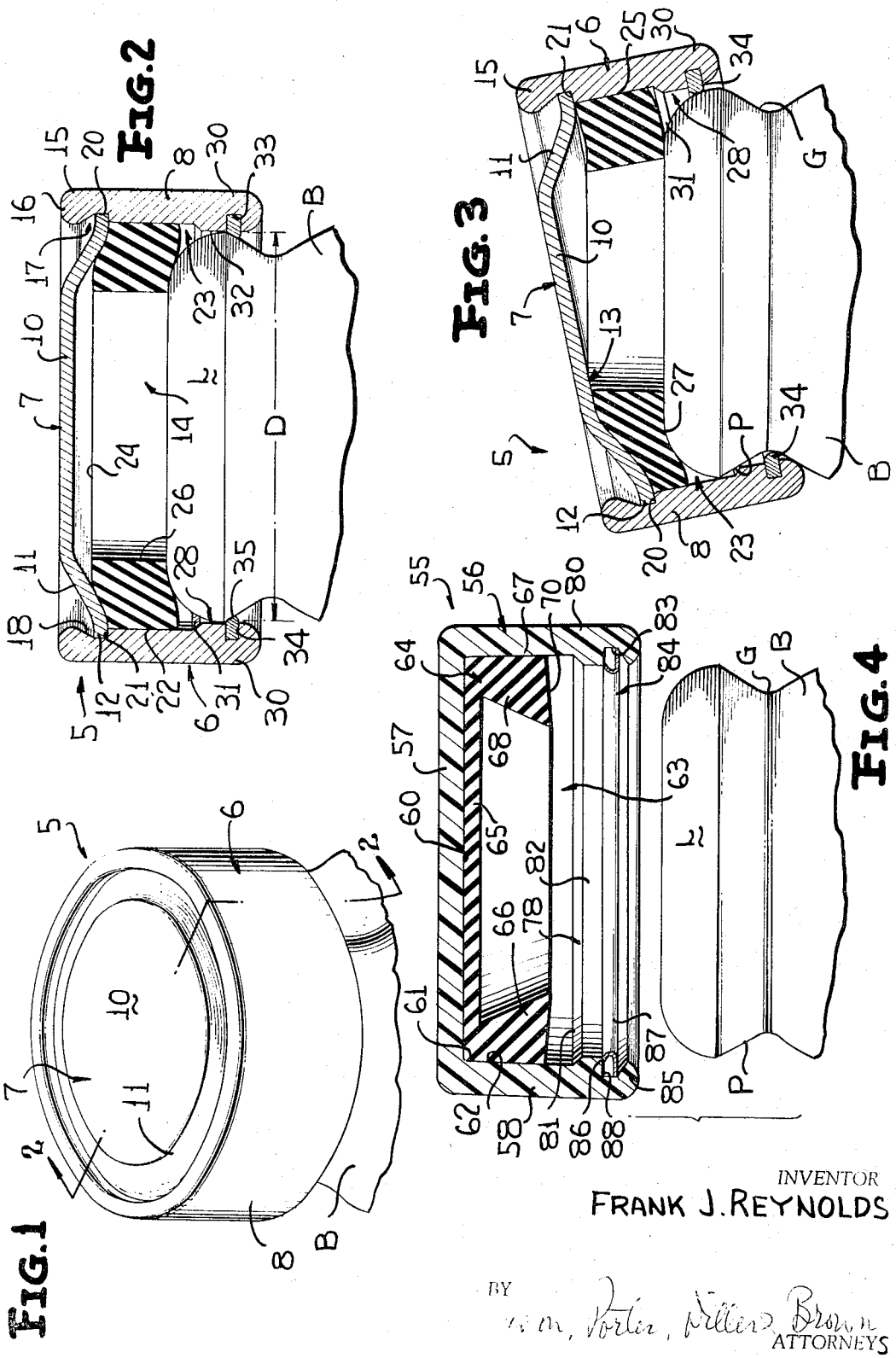

INVENTOR
FRANK J. REYNOLDS

BY
Wm. Porter, Miller & Brown
ATTORNEYS