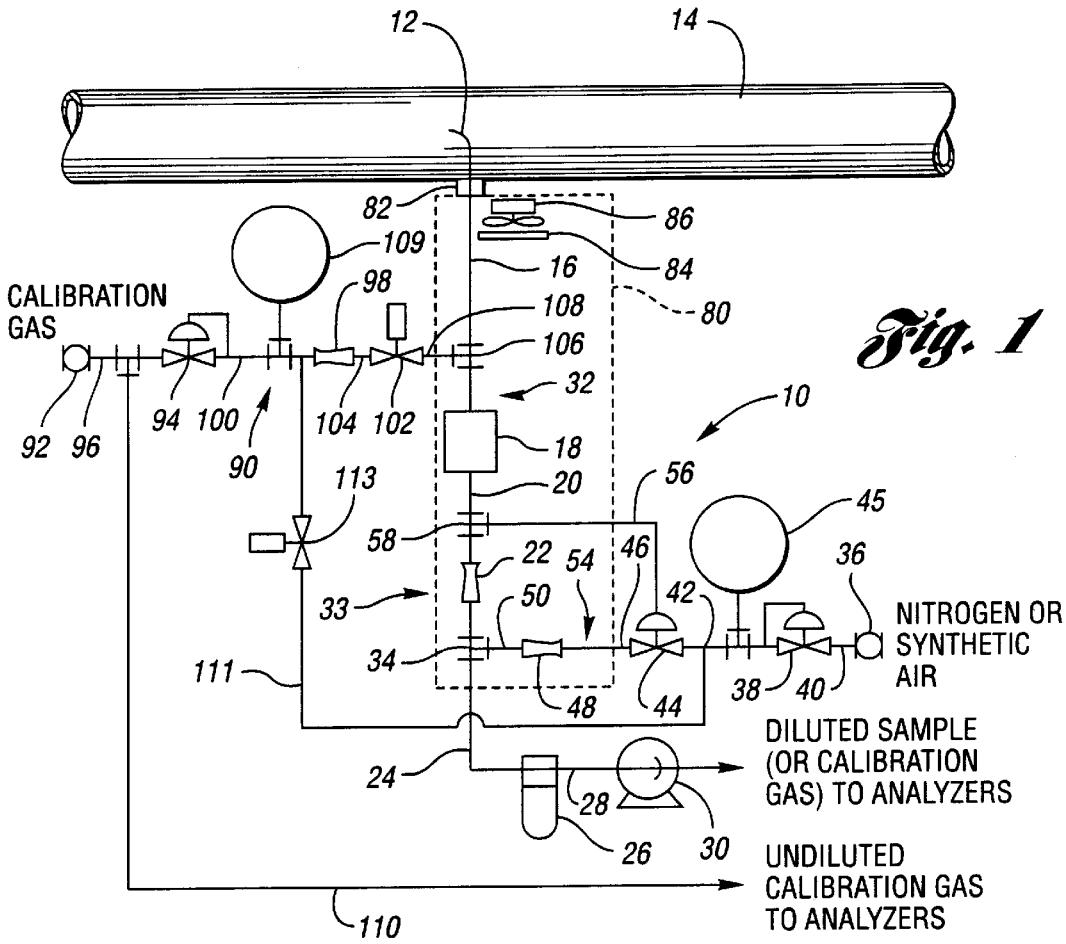
12
14
82
86
109
16
84
CALIBRATION GAS
98
108
80
106
32
10
92
96
94
100
104
102
90
18
113
20
56
45
58
22
54
46
36
33
50
42
NITROGEN OR SYNTHETIC AIR
111
34
38
40
48
44
DILUTED SAMPLE (OR CALIBRATION GAS) TO ANALYZERS
24
28
26
30
UNDILUTED CALIBRATION GAS TO ANALYZERS
110

Fig. 1

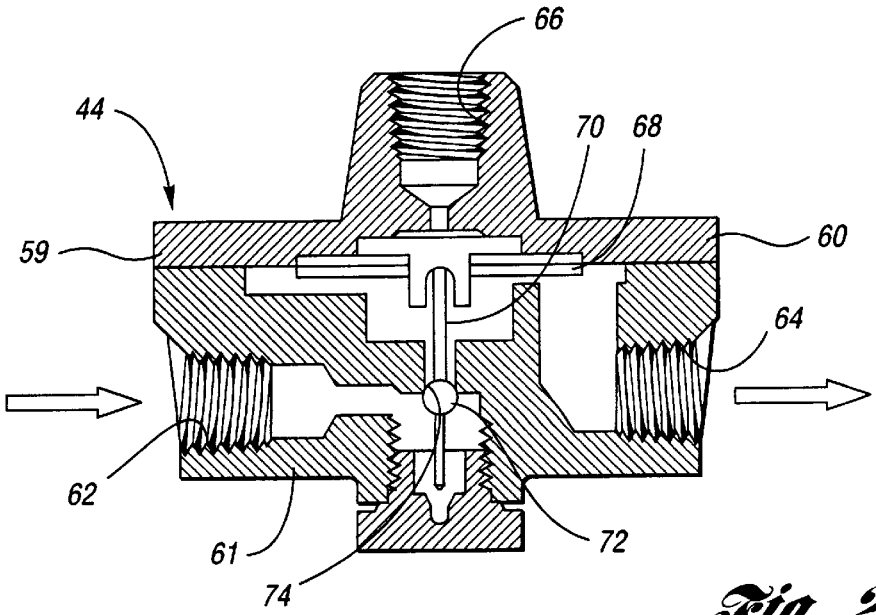
66
44
70
68
59
60
64
62
61
72
74

Fig. 2