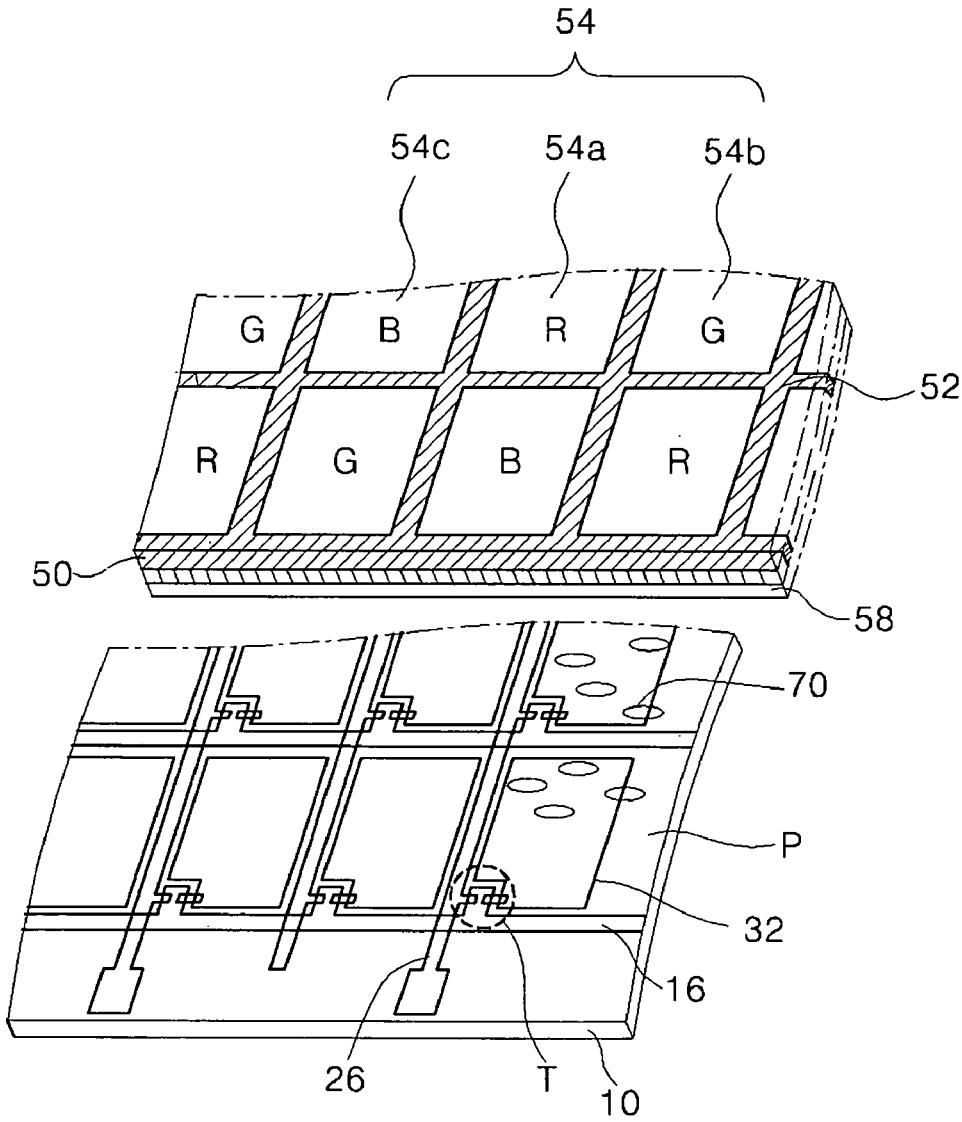FIG. 1
RELATED ART