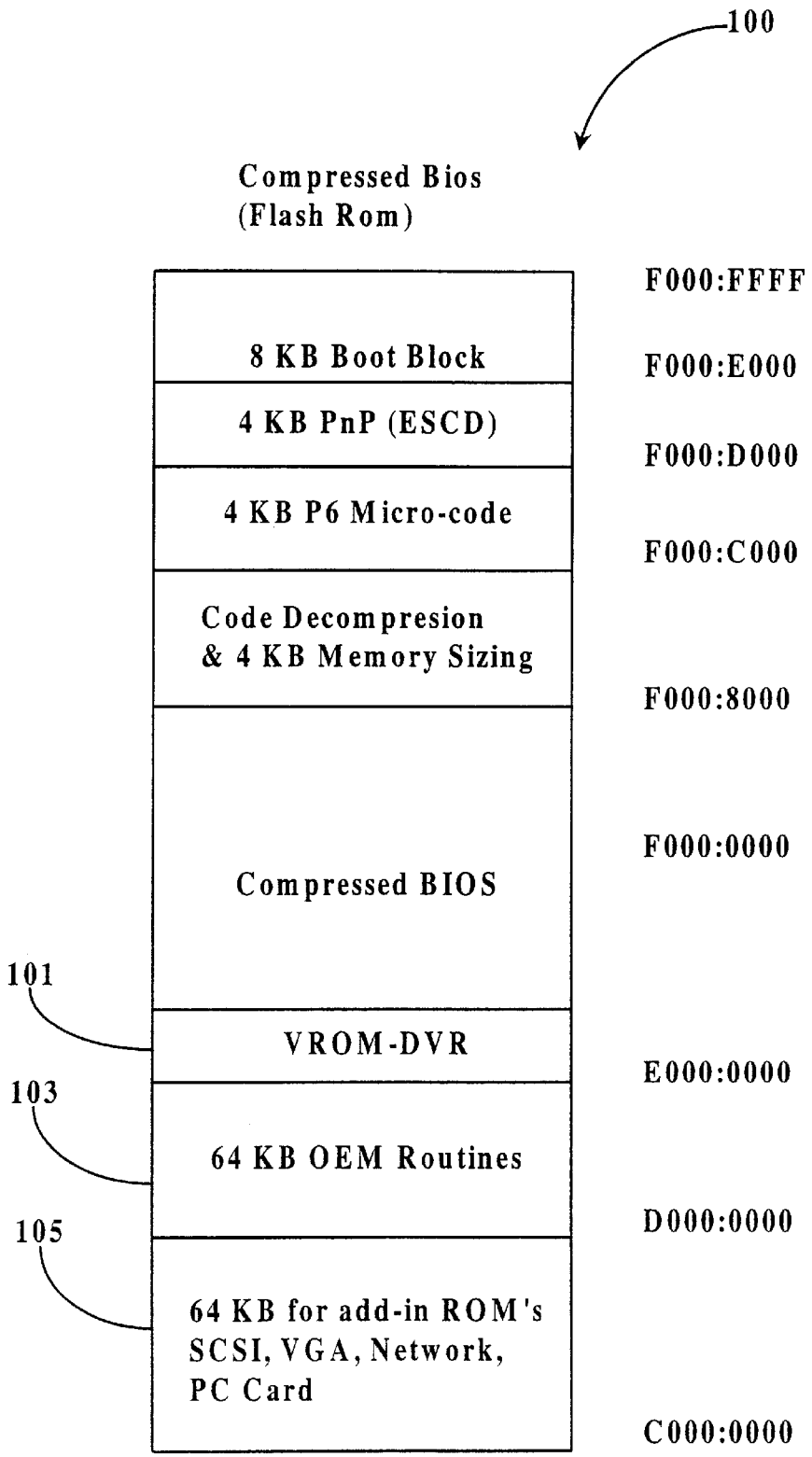
100
Compressed Bios
(Flash Rom)
F000:FFFF
8 KB Boot Block
F000:E000
4 KB PnP (ESCD)
F000:D000
4 KB P6 Micro-code
F000:C000
Code Decompresion
& 4 KB Memory Sizing
F000:8000
Compressed BIOS
F000:0000
101
VROM-DVR
E000:0000
103
64 KB OEM Routines
D000:0000
105
64 KB for add-in ROM's
SCSI, VGA, Network,
PC Card
C000:0000

Fig. 1