SPACE DIVIDER

Filed May 18, 1967 2 Sheets-Sheet 1

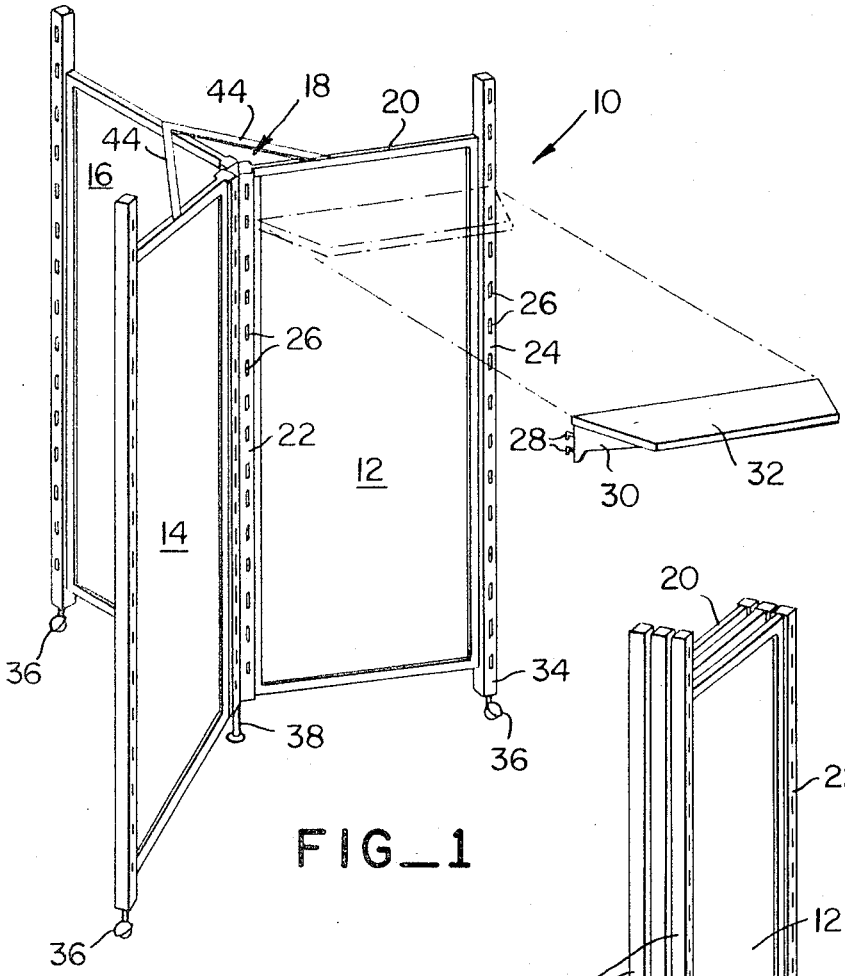

FIG_1

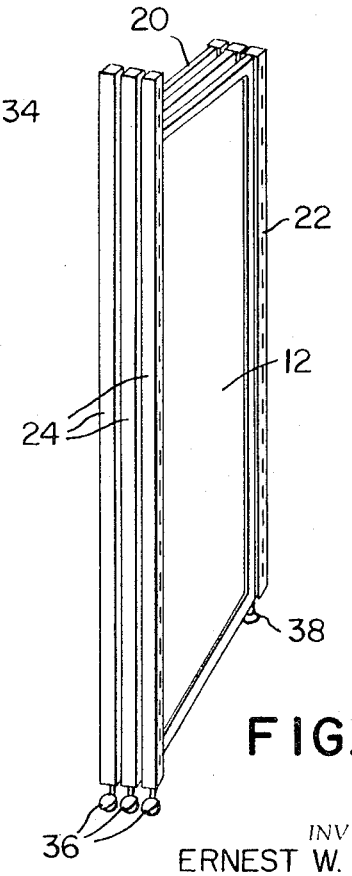

FIG_2

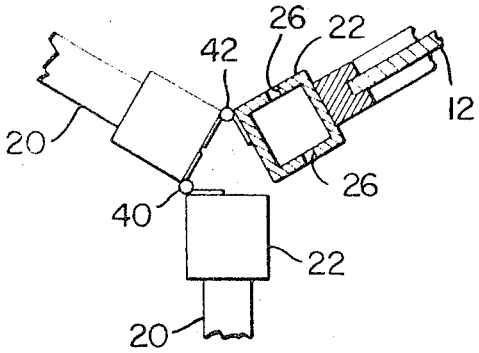

FIG_3

INVENTORS
ERNEST W. CANNON
DAVID W. BYRENS
BY
Townsend and Townsend
ATTORNEYS