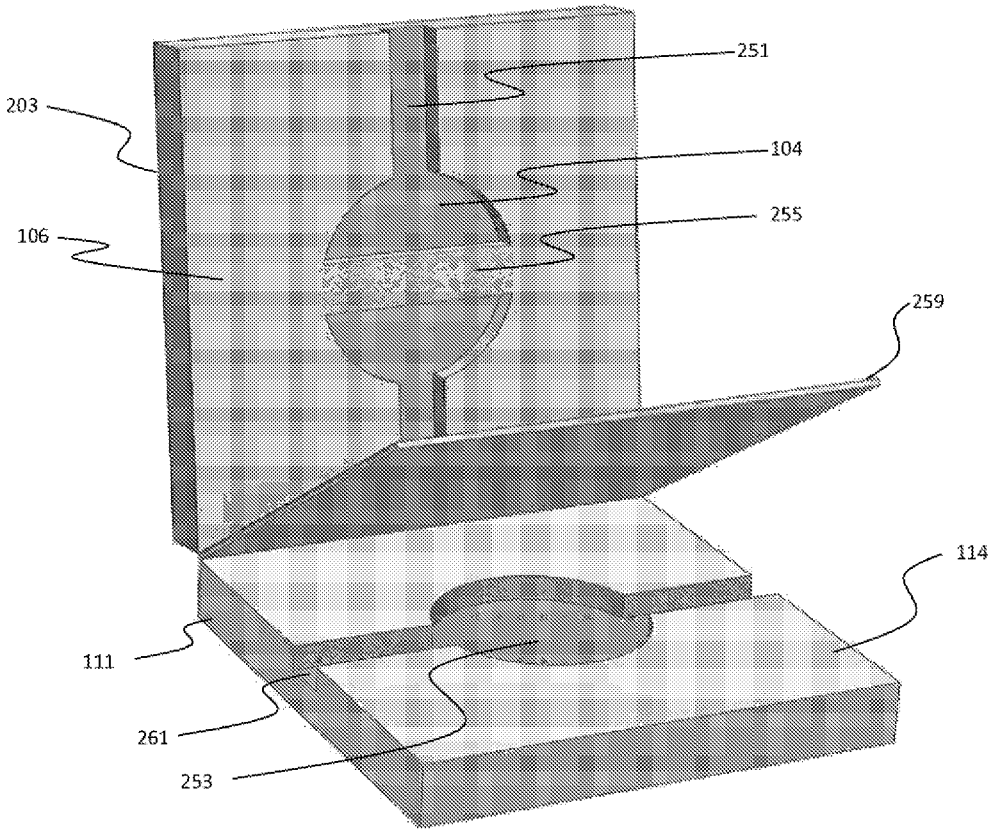

Figure 1A