US005150118A

United States Patent [19]

Finkle et al.

[11] Patent Number: 5,150,118

[45] Date of Patent: Sep. 22, 1992

[54] INTERCHANGEABLE CODED KEY PAD ASSEMBLIES ALTERNATELY ATTACHABLE TO A USER DEFINABLE KEYBOARD TO ENABLE PROGRAMMABLE KEYBOARD FUNCTIONS

[75] Inventors: **Thomas W. Finkle**, Santa Rosa; **Ralph M. Swanson**, Sebastopol, both of Calif.

[73] Assignee: **Hewlett-Packard Company**, Palo Alto, Calif.

[21] Appl. No.: **629,059**

[22] Filed: **Dec. 14, 1990**

Related U.S. Application Data

[63] Continuation of Ser. No. 348,826, May 8, 1989, abandoned.

[51] **Int. Cl.**[5] **H03M 11/02**

[52] **U.S. Cl.** **341/23**; 341/22; 361/399; 364/708; 364/709.1

[58] **Field of Search** ..... 341/22, 23, 26, 33; 200/5 A; 235/145 R; 361/397-399; 400/472, 477, 479, 479.1, 490, 491-491.2; 364/708, 709.01, 709.1, 709.12

[56] **References Cited**

U.S. PATENT DOCUMENTS

4,092,527	5/1978	Luecke	341/22 X
4,261,042	4/1981	Ishiwatari et al.	341/22
4,279,021	7/1981	See et al.	341/23
4,326,193	4/1982	Markley et al.	341/22 X
4,333,155	6/1982	Johnston	341/22 X
4,359,222	11/1982	Smith, III et al.	341/23 X
4,441,001	4/1984	Miyano et al.	341/23 X
4,490,587	12/1984	Miller et al.	200/512
4,532,575	6/1985	Suwa	341/22
4,764,770	8/1988	Church	341/22
4,778,952	10/1988	Watkins et al.	200/5 A
4,890,832	1/1990	Komaki	341/23 X

Primary Examiner—Donald J. Yusko
Assistant Examiner—Michael Horabik
Attorney, Agent, or Firm—William C. Milks, III

[57] **ABSTRACT**

Coded interchangeable key pad assemblies alternately installed on a keyboard so that one of a variety of programmable sets of keyboard functions is enabled for selection by user actuation of the keys. Each key pad assembly has a durable construction and is securely attachable to the remainder of the keyboard. Each key pad assembly is installed on the remainder of the keyboard and interacts with the system with which the keyboard interfaces, preferably a programmable system, to provide a custom key panel for the user so that key functions can be tailored to a desired selection of operations available to the user upon actuation of the keys.
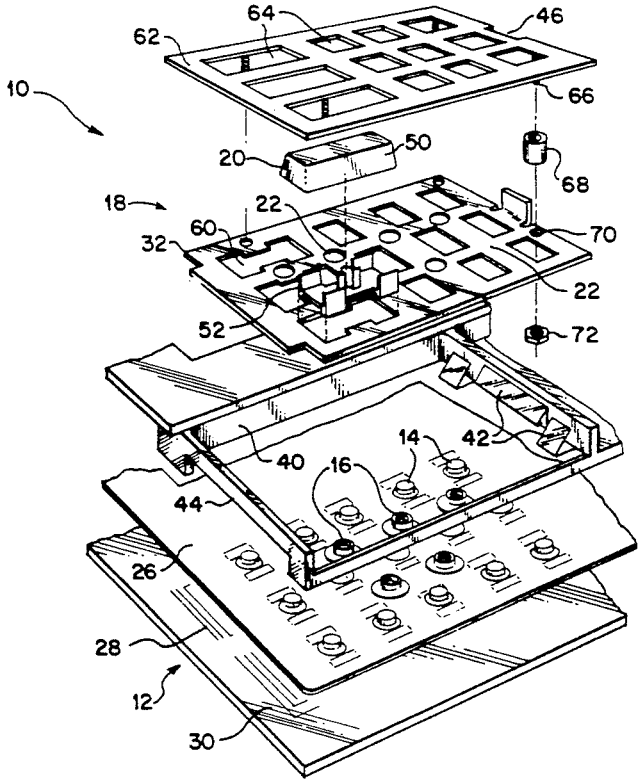
18 Claims, 8 Drawing Sheets