US005749918A

United States Patent [19]

Hogendijk et al.

[11] **Patent Number: 5,749,918**

[45] **Date of Patent: May 12, 1998**

[54] **INTRALUMINAL GRAFT AND METHOD FOR INSERTING THE SAME**

[75] Inventors: **Michael Hogendijk**, County of Santa Clara, Calif.; **Mark H. Wholey**, County of Allegheny, Pa.

[73] Assignee: **Endotex Interventional Systems, Inc.**, Menlo Park, Calif.

[21] Appl. No.: **504,592**

[22] Filed: **Jul. 20, 1995**

[51] **Int. Cl.**[6] **A61F 2/06**

[52] **U.S. Cl.** **623/1**; 606/194; 606/108

[58] **Field of Search** 623/1, 12; 604/194, 604/195, 108

[56] **References Cited**

U.S. PATENT DOCUMENTS

3,874,388	4/1975	King et al. .	
4,140,126	2/1979	Choudhury	623/1
4,562,596	1/1986	Kornberg .	
4,585,000	4/1986	Hershenson .	
4,733,665	3/1988	Palmaz .	
4,739,762	4/1988	Palmaz .	
4,776,337	10/1988	Palmaz .	
4,820,298	4/1989	Leveen et al. .	
5,147,370	9/1992	McNamara et al.	623/1
5,370,691	12/1994	Samson	606/194
5,476,505	12/1995	Limon	623/1
5,489,295	2/1996	Piplani et al.	623/12
5,562,641	10/1996	Flomenblit et al.	623/1

FOREIGN PATENT DOCUMENTS

539237	4/1993	European Pat. Off.	623/1
9416629	8/1994	WIPO	606/108

Primary Examiner—Debra S. Brittingham
Assistant Examiner—Bruce E. Snow
Attorney, Agent, or Firm—Fish & Neave

[57] **ABSTRACT**

An intraluminal graft and method for inserting the same are provided including a biocompatible body, anchors attached to surface of the body, and an engine that includes an engine coil positioned within and attached to the body. The coil also is configured for attachment to an insertion device.
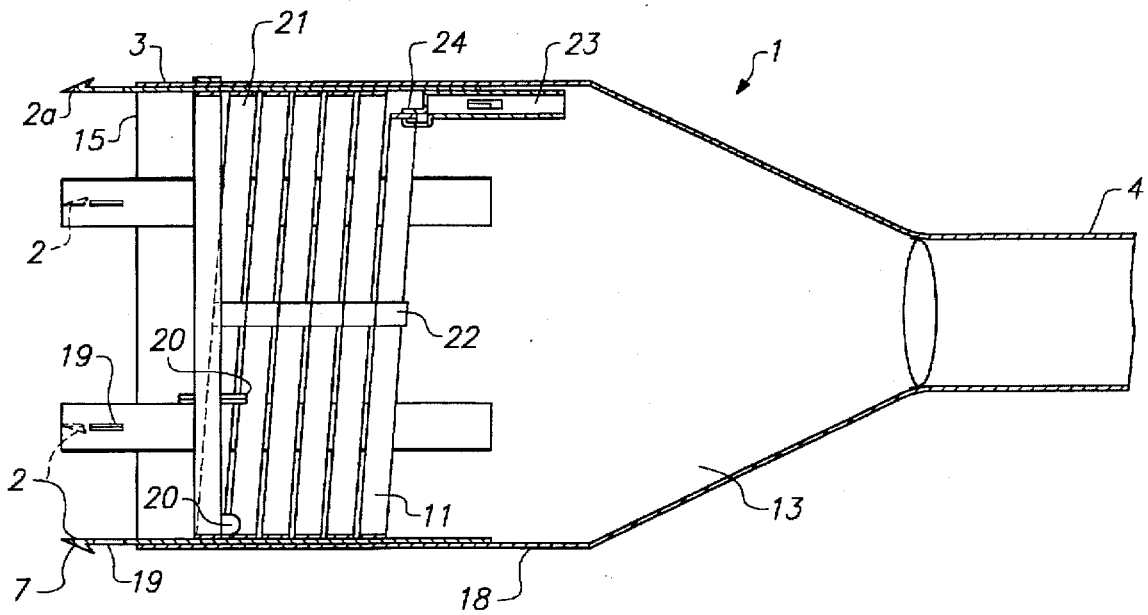
11 Claims, 7 Drawing Sheets