US008740618B2

(12) **United States Patent**
Shaw

(10) **Patent No.: US 8,740,618 B2**
(45) **Date of Patent: Jun. 3, 2014**

(54) **BRAILLE MODULE WITH COMPRESSIBLE PIN ARRAYS**

(76) Inventor: **Keith N. Shaw**, Gloucester, MA (US)

(*) Notice: Subject to any disclaimer, the term of this patent is extended or adjusted under 35 U.S.C. 154(b) by 1892 days.

(21) Appl. No.: **11/880,360**

(22) Filed: **Jul. 20, 2007**

(65) **Prior Publication Data**

US 2009/0023116 A1 Jan. 22, 2009

(51) **Int. Cl.**
G09B 21/00 (2006.01)

(52) **U.S. Cl.**
CPC ***G09B 21/004*** (2013.01); ***G09B 21/003*** (2013.01)
USPC **434/113**; 434/112; 434/114; 434/115; 116/17; 116/205; 340/407.1; 340/407.2; 348/62

(58) **Field of Classification Search**
CPC G09B 21/003; G09B 21/004
USPC 434/112, 113, 114; 116/17, 205; 340/407.1, 407.2; 348/62
See application file for complete search history.

(56) **References Cited**

U.S. PATENT DOCUMENTS

3,659,354 A * 5/1972 Sutherland 434/113
3,987,438 A * 10/1976 Lindenmueller et al. .. 340/407.1
4,178,586 A * 12/1979 Schonherr 340/407.1
4,191,945 A 3/1980 Hannen et al.
4,283,178 A 8/1981 Tetzlaff 434/114
4,445,871 A * 5/1984 Becker 434/114
4,600,320 A * 7/1986 Hoovler et al. 400/109.1
4,871,992 A * 10/1989 Petersen 340/407.1
4,898,536 A * 2/1990 Hoffarth 434/114
5,449,292 A 9/1995 Tani et al.
5,580,251 A 12/1996 Gilkes et al.
5,685,721 A 11/1997 Decker
5,717,423 A * 2/1998 Parker 434/114
6,109,922 A * 8/2000 Litschel et al. 434/114
6,354,839 B1 * 3/2002 Schmidt et al. 434/113
6,417,821 B1 * 7/2002 Becker et al. 345/31
6,445,284 B1 * 9/2002 Cruz-Hernandez et al. 340/407.1
6,459,364 B2 10/2002 Gupta
6,692,255 B2 * 2/2004 Roberts et al. 434/113
6,693,516 B1 * 2/2004 Hayward 340/407.1
6,734,785 B2 5/2004 Petersen
6,743,021 B2 6/2004 Prince et al.
6,776,619 B1 8/2004 Roberts et al.
6,827,512 B1 12/2004 Souluer
6,902,403 B1 6/2005 Goldenberg
7,009,595 B2 3/2006 Roberts et al.
7,018,209 B2 3/2006 Schleppenbach et al.
7,367,806 B1 * 5/2008 Murphy et al. 434/112
7,462,034 B1 * 12/2008 Murphy et al. 434/112
7,723,896 B2 * 5/2010 Esashi et al. 310/306
2004/0110562 A1 * 6/2004 Kajino et al. 463/36
2008/0206722 A1 * 8/2008 Fukami 434/114
2008/0246737 A1 * 10/2008 Benali-Khoudja et al. ... 345/173

* cited by examiner

Primary Examiner — Nikolai A Gishnock
(74) *Attorney, Agent, or Firm* — Patent Law & Venture Group; Gene Scott

(57) **ABSTRACT**

A refreshable tactile reader apparatus for Braille text and graphics, utilizing a plurality of compressible tactile pins that can absorb strong downward forces. Such strong forces transmitted through tactile pins can damage pin actuation mechanisms. The physical enclosure of the reader provides open channels that allow the apparatus to be more easily cleaned than prior art enablements.
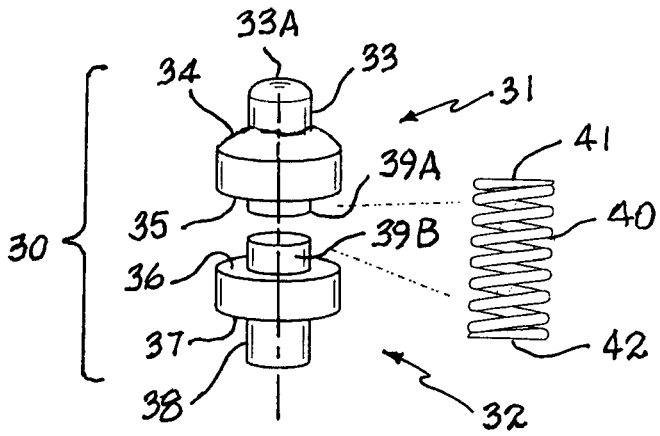
8 Claims, 2 Drawing Sheets