US009636618B2

(12) **United States Patent**
Fung et al.

(10) **Patent No.: US 9,636,618 B2**
(45) **Date of Patent: May 2, 2017**

(54) **SMOKE EXHAUST SYSTEM FOR A COOKING APPLIANCE**

(71) Applicant: **CONAIR CORPORATION**, Stamford, CT (US)

(72) Inventors: **Kam Fai Fung**, Hong Kong (CN); **Kin Man Lai**, Hong Kong (CN)

(73) Assignee: **Conair Corporation**, Stamford, CT (US)

(*) Notice: Subject to any disclaimer, the term of this patent is extended or adjusted under 35 U.S.C. 154(b) by 327 days.

(21) Appl. No.: **13/958,692**

(22) Filed: **Aug. 5, 2013**

(65) **Prior Publication Data**

US 2015/0033952 A1 Feb. 5, 2015

(51) **Int. Cl.**

A47J 37/00	(2006.01)
B01D 46/00	(2006.01)
A47J 37/06	(2006.01)
F24C 15/20	(2006.01)
B01D 46/10	(2006.01)
A47J 36/38	(2006.01)
B01D 53/04	(2006.01)

(52) **U.S. Cl.**

CPC ***B01D 46/0038*** (2013.01); ***A47J 36/38*** (2013.01); ***A47J 37/0611*** (2013.01); ***B01D 46/10*** (2013.01); ***F24C 15/2035*** (2013.01); *B01D 53/04* (2013.01); *B01D 2253/102* (2013.01); *B01D 2257/90* (2013.01); *B01D 2258/0275* (2013.01)

(58) **Field of Classification Search**

CPC A47J 37/0611; A47J 2037/0617; A21B 5/023; B01D 46/10

USPC 99/372, 373, 374, 375, 376, 377, 378, 99/379, 380; 95/273, 285

See application file for complete search history.

(56) **References Cited**

U.S. PATENT DOCUMENTS

2,033,060	A		3/1936	Anderson
2,057,501	A		10/1936	Parr
2,607,287	A		8/1952	Price
2,719,903	A		10/1955	Oertli
4,034,663	A	*	7/1977	Jenn 99/446
4,036,995	A		7/1977	Koether et al.
4,088,067	A		5/1978	Kaebitzsch et al.
4,206,345	A		6/1980	Maass et al.
4,697,504	A		10/1987	Keating
4,989,580	A	*	2/1991	Dunham ..... 126/41 R
5,237,914	A		8/1993	Carstensen
5,467,696	A		11/1995	Everhart
5,531,155	A		7/1996	Pellicane et al.
5,712,466	A		1/1998	Spicer
5,758,568	A		6/1998	Moravec

(Continued)

FOREIGN PATENT DOCUMENTS

EP 2062514 * 5/2009 ..... A41J 37/0611

Primary Examiner — Reginald L Alexander

(74) *Attorney, Agent, or Firm* — Grogan, Tuccillo & Vanderleeden, LLP

(57) **ABSTRACT**

A cooking appliance includes a lower housing having a lower heating surface, an upper housing operatively connected to the lower housing and having an upper heating surface, and a smoke exhaust system. The smoke exhaust system includes an air inlet in a lower surface of the upper housing adjacent to the upper heating surface, an exhaust vent formed in the upper housing, and a fan disposed in the upper housing. The fan is configured to draw air through the inlet, into the upper housing, and expel the air through the exhaust vent.
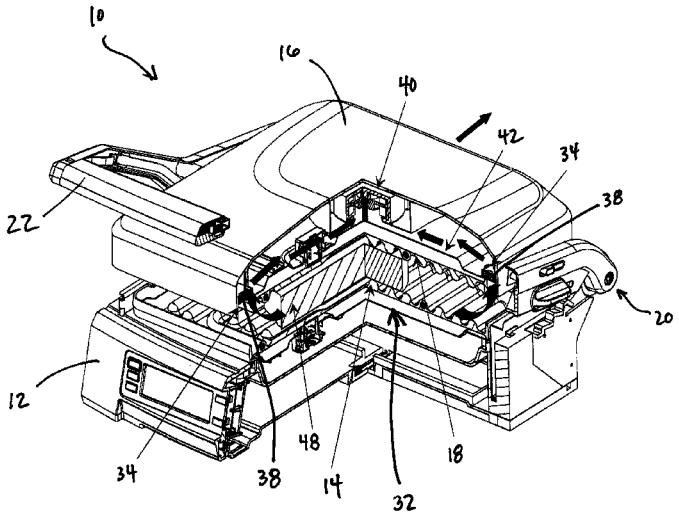
4 Claims, 6 Drawing Sheets