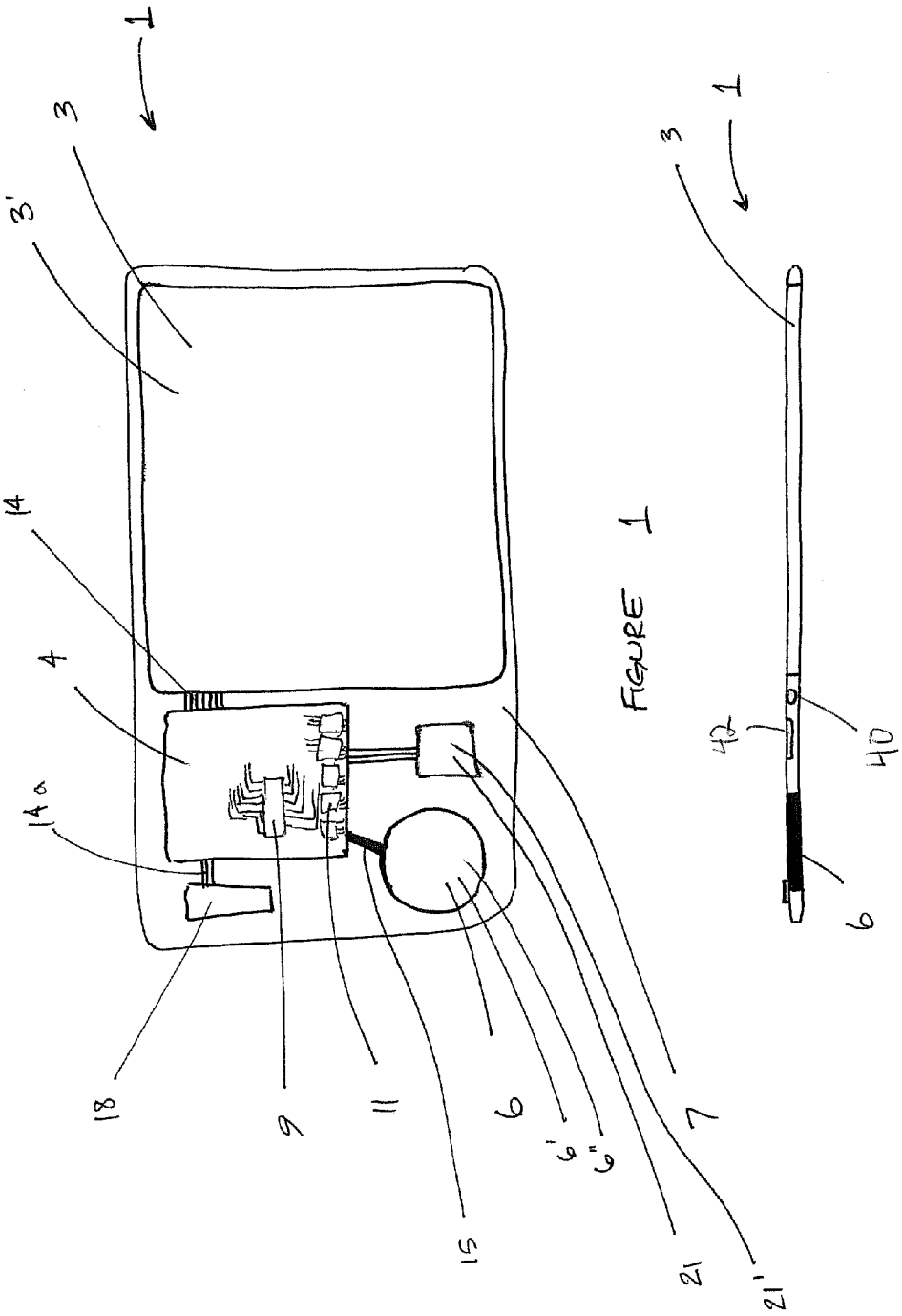

FIGURE 1

FIGURE 1a