US007436318B2

(12) **United States Patent**
Affolter et al.

(10) **Patent No.: US 7,436,318 B2**
(45) **Date of Patent: *Oct. 14, 2008**

(54) **SELF CONTAINED DEVICE FOR DISPLAYING ELECTRONIC INFORMATION**

(75) Inventors: **Allen Affolter**, Indiana, PA (US); **Titus Mathews**, Calgary, CA (US)

(73) Assignee: **ATG DesignWorks, LLC**, Indiana, PA (US)

(*) Notice: Subject to any disclaimer, the term of this patent is extended or adjusted under 35 U.S.C. 154(b) by 0 days.

This patent is subject to a terminal disclaimer.

(21) Appl. No.: **11/774,670**

(22) Filed: **Jul. 9, 2007**

(65) **Prior Publication Data**

US 2008/0012721 A1 Jan. 17, 2008

Related U.S. Application Data

(63) Continuation-in-part of application No. 10/828,406, filed on Apr. 19, 2004, now Pat. No. 7,242,315.

(51) **Int. Cl.**
G08B 5/22 (2006.01)

(52) **U.S. Cl.** **340/815.83**; 434/317; 345/169

(58) **Field of Classification Search** 340/815.83; 257/99; 434/317, 308, 309; 361/681; 345/169, 345/156, 901

See application file for complete search history.

(56) **References Cited**

U.S. PATENT DOCUMENTS

4,656,469 A 4/1987 Oliver et al.
4,855,725 A * 8/1989 Fernandez 345/173
5,531,600 A 7/1996 Baer et al.
5,532,711 A 7/1996 Harris
5,534,888 A * 7/1996 Lebby et al. 345/672
5,538,430 A 7/1996 Smith et al.
5,761,485 A 6/1998 Munyan
6,021,306 A 2/2000 McTaggart
6,130,773 A 10/2000 Jacobson et al.
6,396,472 B1 5/2002 Jacklin
6,416,326 B1 * 7/2002 Oh 434/178
6,481,851 B1 11/2002 McNelley et al.
6,490,402 B1 12/2002 Ota
6,597,111 B2 7/2003 Silvernail et al.
6,614,057 B2 9/2003 Silvernail et al.
6,624,568 B2 9/2003 Silvernail
6,763,995 B1 7/2004 Song
6,788,283 B1 9/2004 Blotky et al.
6,897,850 B2 5/2005 Sugimoto
7,242,315 B2 * 7/2007 Affolter et al. 340/815.83
2001/0040560 A1 11/2001 Amron

FOREIGN PATENT DOCUMENTS

DE 3515897 12/1986

OTHER PUBLICATIONS

www.universaldisplay.com; Product Concepts; Nov. 7, 2003.
www.neasia.nikkeibp.com; Packaging Made Smart with Paper-Thin Battery; Nov. 4, 2003.

* cited by examiner

Primary Examiner—Anh V La
(74) *Attorney, Agent, or Firm*—Emerson, Thomson & Bennett, LLC; Roger D. Emerson; Daniel A. Thomson

(57) **ABSTRACT**

A thin flexible electronic display includes a flexible membrane, control circuitry, and self-contained power source, which may be a thin flexible battery. A display may be affixed to an associated device for use in displaying dynamic information or video.
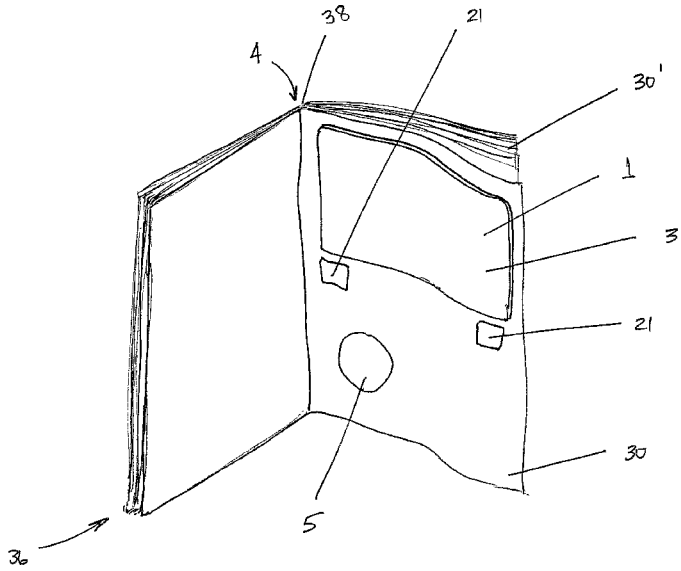
21 Claims, 8 Drawing Sheets