United States Patent [19]

Barker et al.

[11] **Patent Number: 4,714,918**

[45] **Date of Patent: Dec. 22, 1987**

[54] **WINDOW VIEW CONTROL**

[75] Inventors: **Barbara A. Barker**, Round Rock; **Irene H. Hernández**, Austin, both of Tex.

[73] Assignee: **International Business Machines Corporation**, Armonk, N.Y.

[21] Appl. No.: **605,545**

[22] Filed: **Apr. 30, 1984**

[51] **Int. Cl.**[4] **G09G 1/16**

[52] **U.S. Cl.** **340/724**; 340/709; 340/726

[58] **Field of Search** 340/724, 726, 730, 731, 340/721, 709

[56] **References Cited**

U.S. PATENT DOCUMENTS

4,412,294	10/1983	Watts et al.	340/726
4,428,065	1/1984	Duvall et al.	340/731
4,484,302	11/1984	Cason et al.	340/721
4,533,910	8/1985	Sukonick et al.	340/724
4,550,315	10/1985	Bass et al.	340/721

FOREIGN PATENT DOCUMENTS

0108520	5/1984	European Pat. Off.	340/709
59-68042	4/1984	Japan	340/709

OTHER PUBLICATIONS

Williams, Gregg., "The Lisa Computer System", *Byte*, Feb. 1983, pp. 33–50.

Primary Examiner—Marshall M. Curtis
Attorney, Agent, or Firm—J. H. Barksdale, Jr.; H. St. Julian

[57] **ABSTRACT**

A method of, and system for, controlling a view of window information upon editing the information. The view is controlled based on mode selection. For normal information input operations, information scrolling is selected. Related existing information adjacent the newly input information will be viewable, but remote information will eventually be scrolled out of the window. For those instances where all existing information is to remain viewable upon input of additional information, border scrolling will result in a varying of the size of the window.
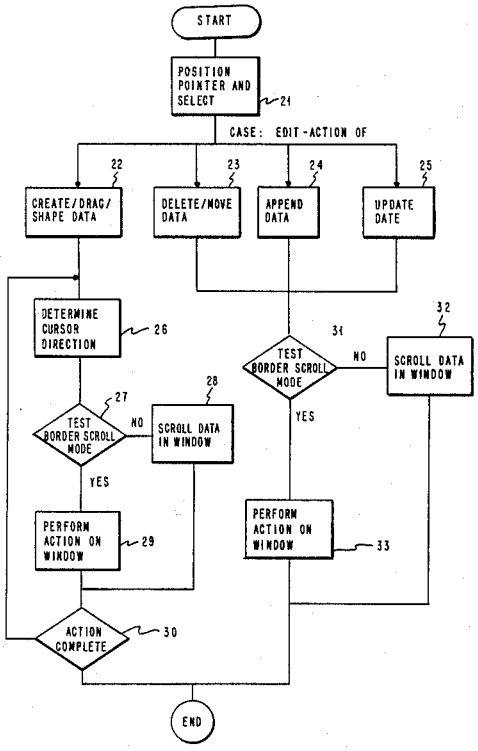
9 Claims, 9 Drawing Figures