US005612718A

United States Patent [19]

Bryan

[11] **Patent Number: 5,612,718**

[45] **Date of Patent: Mar. 18, 1997**

[54] **VARIABLY ADJUSTABLE CHAIR HAVING AN ADJUSTABLE ERGONOMIC KEYBOARD**

[76] Inventor: **Jed A. Bryan**, 188 Linde Cir., Marina, Calif. 93933

[21] Appl. No.: **352,418**

[22] Filed: **Dec. 7, 1994**

Related U.S. Application Data

[63] Continuation of Ser. No. 981,163, Nov. 24, 1992, abandoned.

[51] **Int. Cl.**[6] **G09G 5/04**

[52] **U.S. Cl.** **345/168**; 297/115; 297/411.2; 297/411.35; 297/411.36; 297/411.37; 297/411.38; 297/411.39

[58] **Field of Search** 345/168; 297/115, 297/411.2, 411.35, 411.36, 411.37, 411.38, 411.39

[56] **References Cited**

U.S. PATENT DOCUMENTS

657,033	8/1900	Sanford	108/4
685,956	11/1901	Tesla	375/35
1,279,120	9/1918	Kellogg	297/411.31
3,140,119	7/1964	Offner .	
3,765,720	10/1973	Sakai .	
3,906,369	9/1975	Pitman et al. .	
4,064,560	12/1977	Baxter	364/900
4,081,068	3/1978	Zapp	197/98
4,225,183	9/1980	Hanagan et al.	297/417
4,270,798	6/1981	Harder	297/411.31
4,374,497	2/1983	Harmand	108/4
4,378,553	3/1983	McCall	340/365
4,452,487	6/1984	Plowman	297/411
4,471,995	9/1984	Wisnrewski	297/411
4,589,697	5/1986	Bauer et al.	297/300
4,661,005	4/1987	Lahr	400/489
4,807,618	2/1989	Auchruleck et al.	128/878
4,913,393	4/1990	Wood	248/283
5,022,706	6/1991	Bryan	397/162
5,122,786	1/1992	Rader	340/711
5,143,422	9/1992	Althofer et al.	297/411
5,177,616	1/1993	Riday	358/254
5,281,001	1/1994	Bergsten et al.	297/411.24
5,311,210	5/1994	O'Brien et al.	345/168
5,407,249	4/1995	Bonutti	297/411.35

FOREIGN PATENT DOCUMENTS

60-53360	3/1985	Japan .
1443952	7/1976	United Kingdom .

OTHER PUBLICATIONS

IBM Technical Disclosure Bulletin 20(10): 4250–4251 Mar. 1978.

Article entitled "Inventor Says Apple Stole Keyboard Idea" from the San Jose Mercury News written by Lee Gomes on or about Jan. 25, 1993 and starting at p. 5C.

Article by Steven Levy entitled "Honey, I Split the Keyboard" published in MacWorld Feb. 1990.

Weekly Reader Magazine, Edition 5—vol. 71, Issue 7—Oct. 23, 1992. (p. 4).

Letter to Weekly Reader Corp. from Kinesis with copy of article from New York Times (date unknown).

Primary Examiner—Mark R. Powell
Assistant Examiner—Vincent E. Kovalick
Attorney, Agent, or Firm—LaRiviere, Grubman & Payne

[57] **ABSTRACT**

Variably adjustable chair (**100**) having adjustable arms for optimal positioning by a user to attain greater comfort and operation with reduced stresses and tensions. Each adjustable arm assembly (**198**) and (**199**) includes keyboard supports (**195**) and (**196**) and auxiliary supports (**145**) and (**146**). Keyboard supports are for use with keyboard sections. Right and left keyboard sections (**200**) and (**300**) are divided for independent right- and left-hand actuation. More specifically, a standard computer keyboard, QWERTY keyboard layout, with a numeric data pad, is divided at an optimum location for normal left-and right-hand usage. Each keyboard section includes keys which are optimally positioned for natural orientation actuation by an operator's thumb. Wherein, each adjustable arm assembly and each keyboard section is ergonomically designed for an operator's natural arm-hand-wrist contours for optimal use and comfort with reduced stresses and tensions.
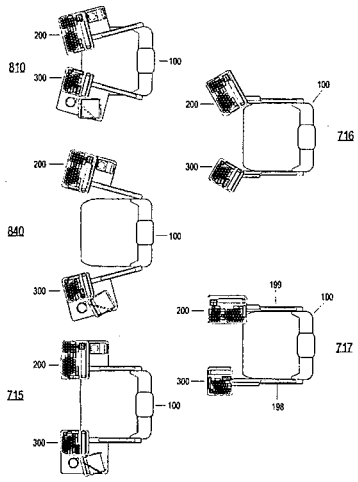
7 Claims, 14 Drawing Sheets