US009410918B2

(12) **United States Patent**
Leyer et al.

(10) **Patent No.: US 9,410,918 B2**
(45) **Date of Patent: Aug. 9, 2016**

(54) **WATER ANALYSIS SENSOR ELECTRODE**

(75) Inventors: **Axel Leyer**, Moenchengladbach (DE); **Lothar Heidemanns**, Korschenbroich (DE); **Andreas Jonak**, Meerbusch (DE); **Markus Hahn**, Kempen (DE); **Michael Kussmann**, Duesseldorf (DE); **Andreas Golitz**, Moers (DE); **Aurelia Stellmach-Hanulok**, Wuelfrath (DE); **Claudia Rieger**, Duesseldorf (DE); **Heinz Rudde**, Hueckelhoven (DE)

(73) Assignee: **HACH LANGE GMBH**, Berlin (DE)

(*) Notice: Subject to any disclaimer, the term of this patent is extended or adjusted under 35 U.S.C. 154(b) by 729 days.

(21) Appl. No.: **13/809,894**

(22) PCT Filed: **Jul. 13, 2011**

(86) PCT No.: **PCT/EP2011/061928**

§ 371 (c)(1),
(2), (4) Date: **Mar. 20, 2013**

(87) PCT Pub. No.: **WO2012/007492**

PCT Pub. Date: **Jan. 19, 2012**

(65) **Prior Publication Data**

US 2013/0168245 A1 Jul. 4, 2013

(30) **Foreign Application Priority Data**

Jul. 15, 2010 (EP) 10169615

(51) **Int. Cl.**

G01N 27/333	(2006.01)
G01N 27/28	(2006.01)
G01N 33/18	(2006.01)

(52) **U.S. Cl.**
CPC ***G01N 27/333*** (2013.01); ***G01N 27/28*** (2013.01); *G01N 33/18* (2013.01)

(58) **Field of Classification Search**
None
See application file for complete search history.

(56) **References Cited**

U.S. PATENT DOCUMENTS

4,838,999	A	6/1989	Haar et al.
2011/0308946	A1	12/2011	Wilke

FOREIGN PATENT DOCUMENTS

DE	89 12 731	U1	2/1990
DE	297 09 141	U1	8/1997
DE	10 2008 055084	A1	6/2010

OTHER PUBLICATIONS

Deveau et al. (Biol. Proced. Online 2005; 7(1): 31-40).*

* cited by examiner

Primary Examiner — Luan Van
Assistant Examiner — Steven Rosenwald
(74) *Attorney, Agent, or Firm* — Norman B. Thot

(57) **ABSTRACT**

A water analysis sensor electrode for determining an analyte in water includes a sensor electrode housing which is configured to be closed. The sensor electrode housing comprises an inner wall and an ion-selective sensor electrode diaphragm arranged at a lower distal end of the sensor electrode housing. An electrolyte solution is in the sensor electrode housing. A measuring electrode is arranged in the sensor electrode housing. A gas bubble is enclosed by the sensor electrode housing. A rigid rod element having a round cross section is arranged in the sensor electrode housing so that a continuous open capillary channel extends over a length of the sensor electrode housing between the rigid rod element and the inner wall.
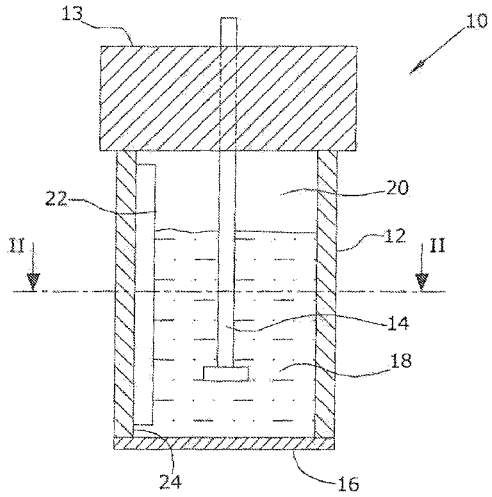
11 Claims, 1 Drawing Sheet