US009510518B2

(12) **United States Patent**
Shein et al.

(10) **Patent No.: US 9,510,518 B2**
(45) **Date of Patent: Dec. 6, 2016**

(54) **SHEET METAL STRUCTURE**

(71) Applicants: **Dimitri Shein**, Anchorage, AK (US); **Rodney Pittman**, Anchorage, AK (US)

(72) Inventors: **Dimitri Shein**, Anchorage, AK (US); **Rodney Pittman**, Anchorage, AK (US)

(73) Assignee: **Dimitri Shein**, Anchorage, AK (US)

(*) Notice: Subject to any disclaimer, the term of this patent is extended or adjusted under 35 U.S.C. 154(b) by 264 days.

(21) Appl. No.: **14/065,287**

(22) Filed: **Oct. 28, 2013**

(65) **Prior Publication Data**

US 2014/0055018 A1 Feb. 27, 2014

Related U.S. Application Data

(63) Continuation-in-part of application No. 13/678,995, filed on Nov. 16, 2012, now abandoned.

(60) Provisional application No. 61/670,123, filed on Jul. 11, 2012.

(51) **Int. Cl.**

A01G 9/02	(2006.01)
A47B 47/00	(2006.01)
B65D 6/16	(2006.01)
B65D 6/00	(2006.01)
B65D 6/26	(2006.01)

(52) **U.S. Cl.**

CPC ***A01G 9/02*** (2013.01); ***A01G 9/026*** (2013.01); ***A47B 47/0066*** (2013.01); ***B65D 7/12*** (2013.01); ***B65D 7/24*** (2013.01); ***B65D 7/30*** (2013.01)

(58) **Field of Classification Search**

CPC A01G 9/02; A01G 9/026; B65D 7/12; B65D 7/24; B65D 7/30; A47B 47/0066

USPC 47/66.1, 66.2, 66.3, 68; 220/9.2, 9.3, 220/666, 3.94, 4.26, 4.27, 4.28, 4.32; 119/452, 474, 482

See application file for complete search history.

(56) **References Cited**

U.S. PATENT DOCUMENTS

459,697	A	*	9/1891	Atkinson	B65D 1/225 220/62
1,088,864	A	*	3/1914	Amundson	B65D 11/1873 217/65
1,259,320	A	*	3/1918	Tyler	B61D 17/18 105/423
1,352,002	A	*	9/1920	Jones	A47B 88/0014 220/4.28
1,355,213	A	*	10/1920	Chipperfield	A47B 47/025 220/690
1,806,610	A	*	5/1931	Christensen	A47B 47/03 312/263
1,850,463	A	*	3/1932	Kleczewski	A21B 3/13 220/4.28
1,858,902	A		5/1932	Prantl	
2,072,395	A		3/1937	Dodson	
2,081,023	A		5/1937	Teach	
2,591,104	A	*	4/1952	Stone	B65D 7/06 220/4.28
2,658,101	A	*	11/1953	Coxe, Jr.	H04B 1/082 174/51
2,659,515	A	*	11/1953	Miller	B65D 7/24 220/4.28

(Continued)

FOREIGN PATENT DOCUMENTS

JP	06146392	A *	5/1994
JP	07227147	A *	8/1995
JP	2002084895	A *	3/2002

Primary Examiner — Son T Nguyen

(74) *Attorney, Agent, or Firm* — AEON Law; Adam L. K. Philipp

(57) **ABSTRACT**

A sheet metal planter comprises three panel types, can be assembled with readily available tools, can be disassembled to fit in a compact space, can be made in more than one shape, does not require fasteners in one embodiment or places a modest load on fasteners in another embodiment, and is aesthetically pleasing.
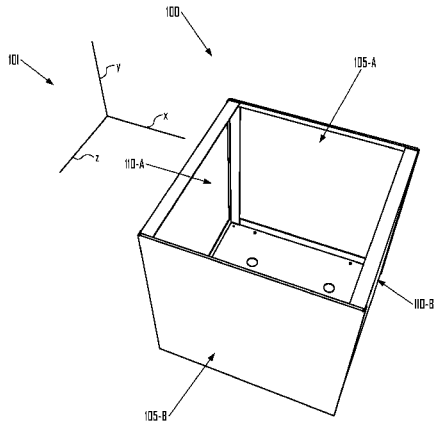
14 Claims, 43 Drawing Sheets