US009409318B2

(12) **United States Patent**
Kusuura

(10) **Patent No.: US 9,409,318 B2**
(45) **Date of Patent: Aug. 9, 2016**

(54) **METHODS AND SYSTEMS FOR COLLECTING THERMOPLASTIC RESINS**

(75) Inventor: **Takahisa Kusuura**, Kawasaki (JP)

(73) Assignee: **Empire Technology Development LLC**, Wilmington, DE (US)

(*) Notice: Subject to any disclaimer, the term of this patent is extended or adjusted under 35 U.S.C. 154(b) by 398 days.

(21) Appl. No.: **13/640,781**

(22) PCT Filed: **Apr. 23, 2012**

(86) PCT No.: **PCT/JP2012/002782**

§ 371 (c)(1),
(2), (4) Date: **Oct. 12, 2012**

(87) PCT Pub. No.: **WO2013/160931**

PCT Pub. Date: **Oct. 31, 2013**

(65) **Prior Publication Data**

US 2013/0280365 A1 Oct. 24, 2013

(51) **Int. Cl.**
B29C 39/42 (2006.01)
B29B 17/02 (2006.01)

(52) **U.S. Cl.**
CPC ***B29B 17/02*** (2013.01); *B29B 2017/0203* (2013.01); *B29B 2017/0255* (2013.01); *Y02W 30/622* (2015.05)

(58) **Field of Classification Search**
CPC B29B 17/02; B29B 2017/0203; B29B 2017/0255; Y02W 30/622
USPC 425/447
See application file for complete search history.

(56) **References Cited**

U.S. PATENT DOCUMENTS

5,549,250	A	8/1996	Stricker	
5,590,789	A	1/1997	Stricker et al.	
2009/0120579	A1	5/2009	Miyasaka et al.	
2010/0189985	A1	7/2010	Satsuka et al.	
2010/0243772	A1 *	9/2010	Kojima et al.	241/24.11

FOREIGN PATENT DOCUMENTS

CN	101434112	A	5/2009
CN	101541497	A	9/2009
EP	2039485	A1	3/2009
EP	2060330	A2	5/2009
GB	2240731	A	8/1991
JP	S49132868	A	12/1974
JP	2515302	B2	7/1996
JP	2002-046128	A	2/2002
JP	2009-013277	A	1/2009
JP	2009-137273	A	6/2009

(Continued)

OTHER PUBLICATIONS

International Search Report and Written Opinion for PCT/JP2012/002782, dated Jul. 31, 2012.

(Continued)

Primary Examiner — Robert J Grun
(74) *Attorney, Agent, or Firm* — Pepper Hamilton LLP

(57) **ABSTRACT**

Systems for collecting a thermoplastic resin that includes a heating mechanism configured to apply heat to the thermoplastic resin so as to control a viscoelasticity thereof, a pressurization mechanism configured to apply a pressure difference to a surface of the thermoplastic resin, and a trapping structure configured to trap a portion of the thermoplastic resin are described.
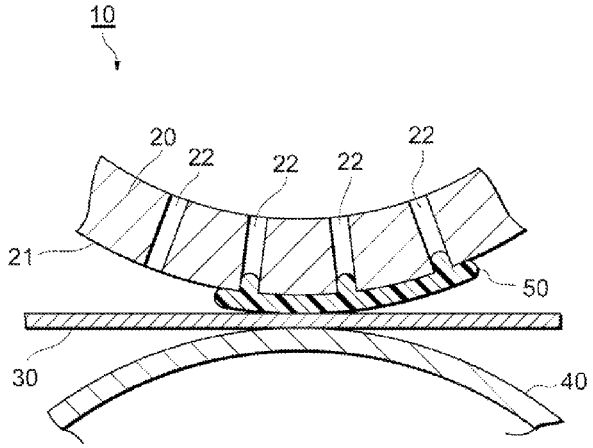
30 Claims, 8 Drawing Sheets