US007407118B2

(12) **United States Patent**
Sevy

(10) **Patent No.: US 7,407,118 B2**
(45) **Date of Patent: Aug. 5, 2008**

(54) **ATOMIZATION JET ASSEMBLY**

(76) Inventor: **Earl Vaughn Sevy**, 4560 N. Tomahawk Dr., Enoch, UT (US) 84720

(*) Notice: Subject to any disclaimer, the term of this patent is extended or adjusted under 35 U.S.C. 154(b) by 503 days.

(21) Appl. No.: **10/821,677**

(22) Filed: **Apr. 8, 2004**

(65) **Prior Publication Data**

US 2005/0077383 A1 Apr. 14, 2005

Related U.S. Application Data

(60) Provisional application No. 60/464,664, filed on Apr. 10, 2003.

(51) **Int. Cl.**
B05B 7/30 (2006.01)
A61M 11/00 (2006.01)

(52) **U.S. Cl.** **239/347**; 239/338; 239/342; 128/200.18; 128/200.21

(58) **Field of Classification Search** 239/338, 239/340, 343, 346, 347, 366–370, 424, 386, 239/387; 128/200.21, 200.18, 200.14, 194
See application file for complete search history.

(56) **References Cited**

U.S. PATENT DOCUMENTS

2,826,454	A	3/1958	Coanda	
2,869,188	A	1/1959	Camento	
3,077,307	A	2/1963	Moore	
3,584,792	A	6/1971	Johnson	
3,762,409	A	10/1973	Lester	
4,007,238	A *	2/1977	Glenn	261/78.2
4,333,450	A	6/1982	Lester	
4,512,341	A *	4/1985	Lester	128/200.21
4,566,452	A	1/1986	Farr	
4,588,129	A	5/1986	Shanks	
4,657,007	A	4/1987	Carlin et al.	
RE33,717	E	10/1991	Svoboda	
5,072,883	A *	12/1991	Vidusek	239/290
5,235,969	A *	8/1993	Bellm	128/200.18
5,435,282	A *	7/1995	Haber et al.	128/200.16
5,579,757	A *	12/1996	McMahon et al.	128/200.21
D395,494	S	6/1998	Becker	
5,797,389	A *	8/1998	Ryder	128/200.21
D458,359	S	6/2002	Blanchette	
6,405,944	B1	6/2002	Benalikhoudja	
6,796,513	B2 *	9/2004	Fraccaroli	239/338
7,143,763	B2 *	12/2006	Abate	128/200.14

* cited by examiner

Primary Examiner—Len Tran
Assistant Examiner—James S Hogan
(74) *Attorney, Agent, or Firm*—Bay Area Intellectual Property Group LLC.

(57) **ABSTRACT**

An improved atomization jet assembly for aromatherapy essential oil diffuser wells. It does not loose the cap during handling. It uses the capillary of liquids principal to draw essential oils between the exterior of the jet FIG. **12** and the inner cap profile FIG. **7**. The flow of liquid is stopped by a capillary break **40**. The Ventura principal is then used to create a low pressure area between the top of the jet ball **44** and the inside radius of the cap **65**. An air/oil mixture blows out of the cap orifice **66** with the aid of an air pump. The net result is increased availability of air molecules attaching to oil molecules and making them airborne and breathable.
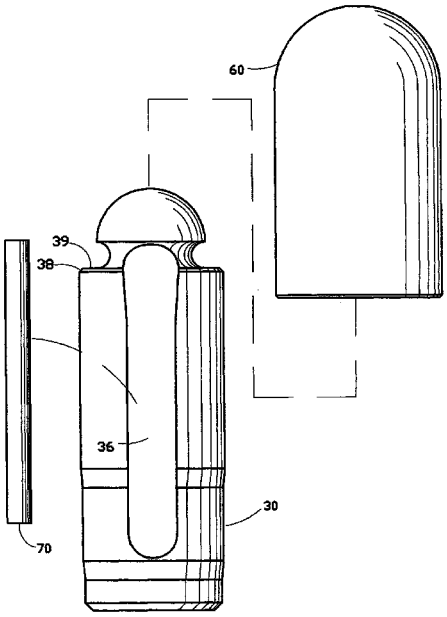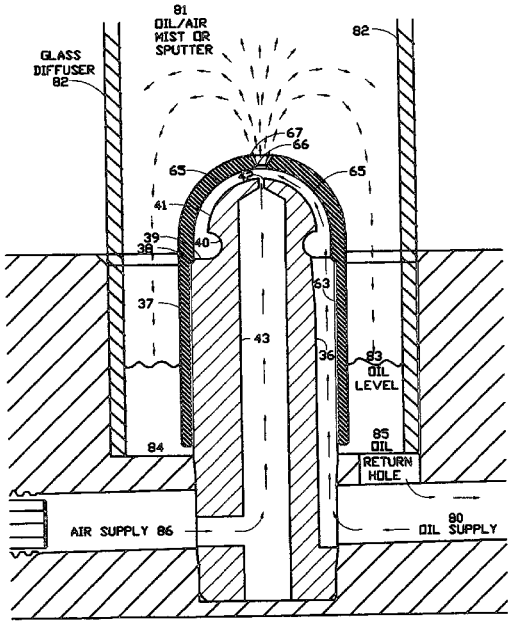
4 Claims, 12 Drawing Sheets