June 4, 1968 R. B. SHANKLAND, SR 3,386,617

STACKABLE CONTAINER WITH MOVABLE HANDLE ON EACH END

Filed April 18, 1966

FIG. 1

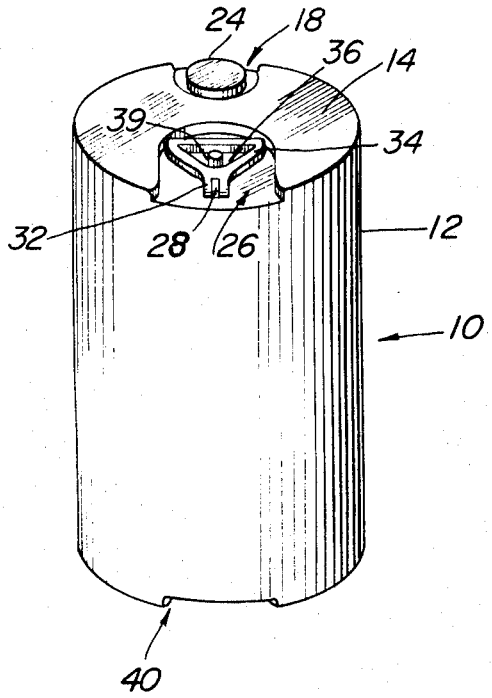

FIG. 2

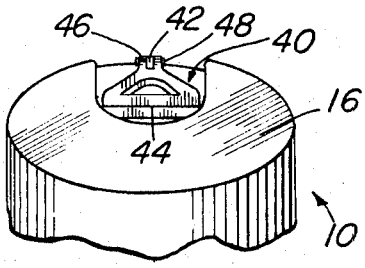

FIG. 3

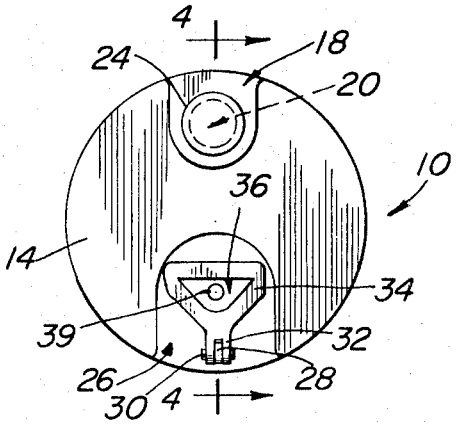

FIG. 4

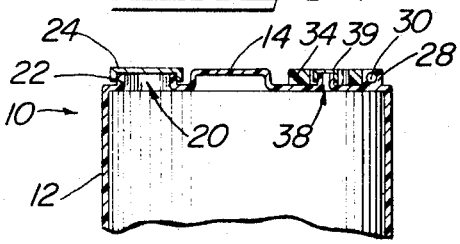

FIG. 5

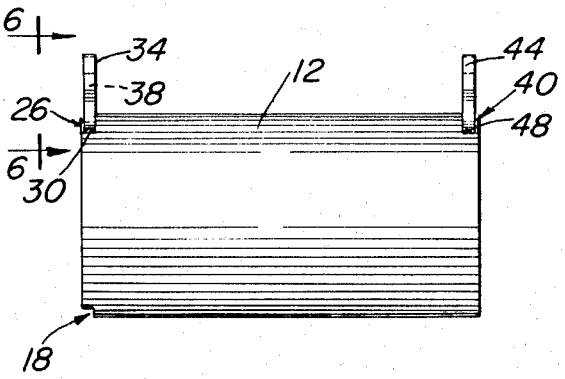

FIG. 6

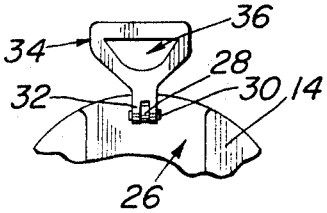

INVENTOR.
RONALD B. SHANKLAND, SR.

BY Daniel W. Vittum Jr.
ATTY.