US005985317A

United States Patent [19]

Venkateshwaran et al.

[11] **Patent Number: 5,985,317**

[45] **Date of Patent: Nov. 16, 1999**

[54] **PRESSURE SENSITIVE ADHESIVE MATRIX PATCHES FOR TRANSDERMAL DELIVERY OF SALTS OF PHARMACEUTICAL AGENTS**

[75] Inventors: **Srinivasan Venkateshwaran**; **David Fikstad**; **Charles D. Ebert**, all of Salt Lake City, Utah

[73] Assignee: **TheraTech, Inc.**, Salt Lake City, Utah

[21] Appl. No.: **08/706,624**

[22] Filed: **Sep. 6, 1996**

[51] **Int. Cl.**[6] **A61L 15/16**

[52] **U.S. Cl.** **424/449**; 424/447; 424/448

[58] **Field of Search** 424/448, 449, 424/447

[56] **References Cited**

U.S. PATENT DOCUMENTS

4,201,211	5/1980	Chandrasekaran et al.	128/268
4,262,003	4/1981	Urquhart et al.	424/267
4,409,206	10/1983	Stricker	424/81
4,564,010	1/1986	Coughlan et al.	128/156
4,645,502	2/1987	Gale et al.	604/896
4,863,970	9/1989	Patel et al.	514/784
4,904,475	2/1990	Gale et al.	424/449
4,956,171	9/1990	Chang	424/449
5,002,773	3/1991	Keshary et al.	424/448
5,149,538	9/1992	Granger	424/449
5,186,938	2/1993	Sablotsky et al.	424/443
5,230,896	7/1993	Yeh et al.	424/443
5,310,559	5/1994	Shah	424/448
5,368,860	11/1994	Sunami	424/448
5,589,498	12/1996	Mohr	514/413
5,633,009	5/1997	Kenealy	424/448

OTHER PUBLICATIONS

R. J. Scheuplein, Permeability of the Skin, 51, Physiological Reviews, 702–47 (1972).

Primary Examiner—Thurman K. Page
Assistant Examiner—Kathryne E. Shelborne
Attorney, Agent, or Firm—Thorpe, North & Western, L.L.P.

[57] **ABSTRACT**

A method of transdermally or transmucosally delivering a hydrophilic salt form of a drug with a water-based pressure sensitive hydrophobic adhesive matrix patch optionally containing a permeation enhancer is disclosed. A matrix patch comprising a water-based pressure sensitive hydrophobic adhesive, a hydrophilic salt form of a drug, and optionally a permeation enhancer for transdermal or transmucosal delivery of the hydrophilic salt form of the drug is also disclosed.
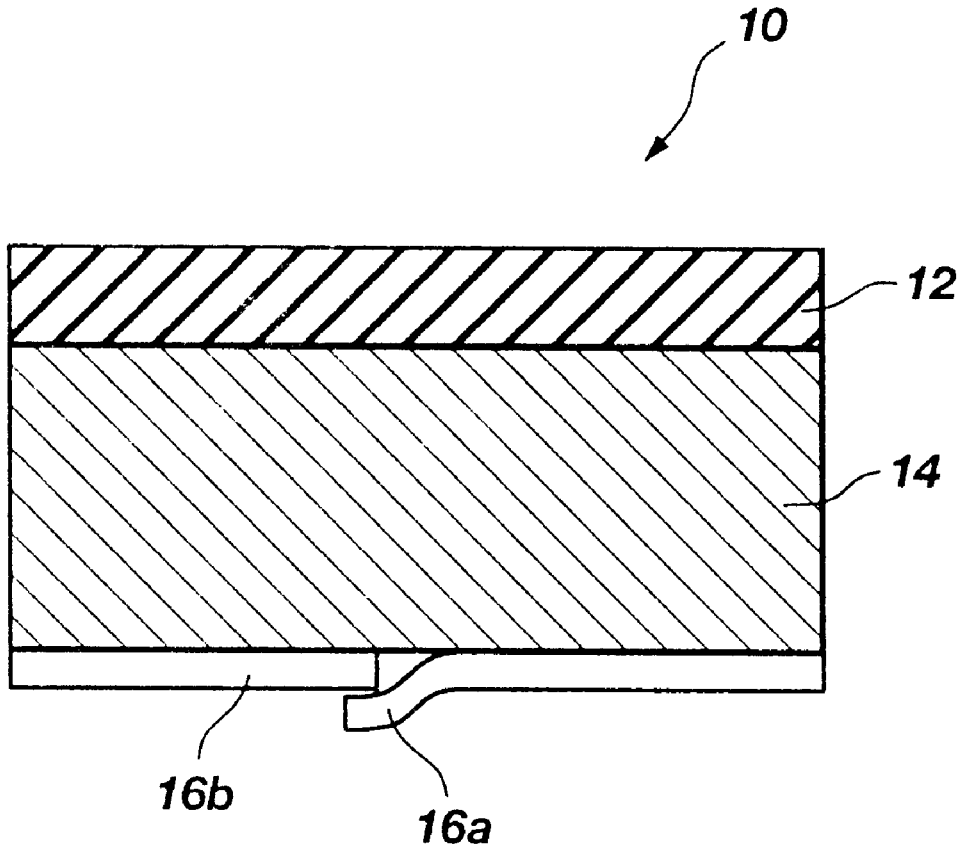
18 Claims, 1 Drawing Sheet