US007584717B2

(12) **United States Patent**
Skovron et al.

(10) **Patent No.: US 7,584,717 B2**
(45) **Date of Patent: Sep. 8, 2009**

(54) **PORTABLE TOILET**

(75) Inventors: **Tobi Skovron**, Elwood (AU); **Simone Iglicki**, Elwood (AU)

(73) Assignee: **Pup Pee Silutions Pty Ltd**, North Caulfield, Victoria (AU)

(*) Notice: Subject to any disclaimer, the term of this patent is extended or adjusted under 35 U.S.C. 154(b) by 189 days.

(21) Appl. No.: **11/692,812**

(22) Filed: **Mar. 28, 2007**

(65) **Prior Publication Data**

US 2007/0283895 A1 Dec. 13, 2007

(30) **Foreign Application Priority Data**

Mar. 29, 2006 (AU) 2006901606
May 17, 2006 (AU) 2006902648

(51) **Int. Cl.**
A01K 1/01 (2006.01)

(52) **U.S. Cl.** **119/165**; 119/166

(58) **Field of Classification Search** 119/165, 119/166, 479, 458, 433
See application file for complete search history.

(56) **References Cited**

U.S. PATENT DOCUMENTS

3,890,931 A * 6/1975 Saver 119/161
3,990,397 A * 11/1976 Lowe, Jr. 119/165
4,444,148 A * 4/1984 Lander 119/165
4,627,383 A * 12/1986 Metzger 119/161
4,838,204 A * 6/1989 Young 119/471
4,869,206 A * 9/1989 Spina 119/417
5,148,771 A * 9/1992 Schuett et al. 119/479
5,353,743 A * 10/1994 Walton 119/166
5,355,837 A * 10/1994 Reyes 119/161
6,408,790 B1 * 6/2002 Maguire 119/166
6,523,495 B1 * 2/2003 Rydman 119/167
6,626,129 B2 * 9/2003 Schrader 119/479
6,701,868 B1 * 3/2004 Shepherd 119/166
7,107,933 B2 * 9/2006 Mohr 119/166
7,395,784 B2 * 7/2008 Hirokawa et al. 119/165

* cited by examiner

Primary Examiner—Yvonne R. Abbott
(74) *Attorney, Agent, or Firm*—Knobbe Martens Olson & Bear LLP

(57) **ABSTRACT**

A portable toilet for an animal, including a catchment part; and a collection part, wherein the catchment part is arranged over the collection part and is shaped to channel urine into the collection part.
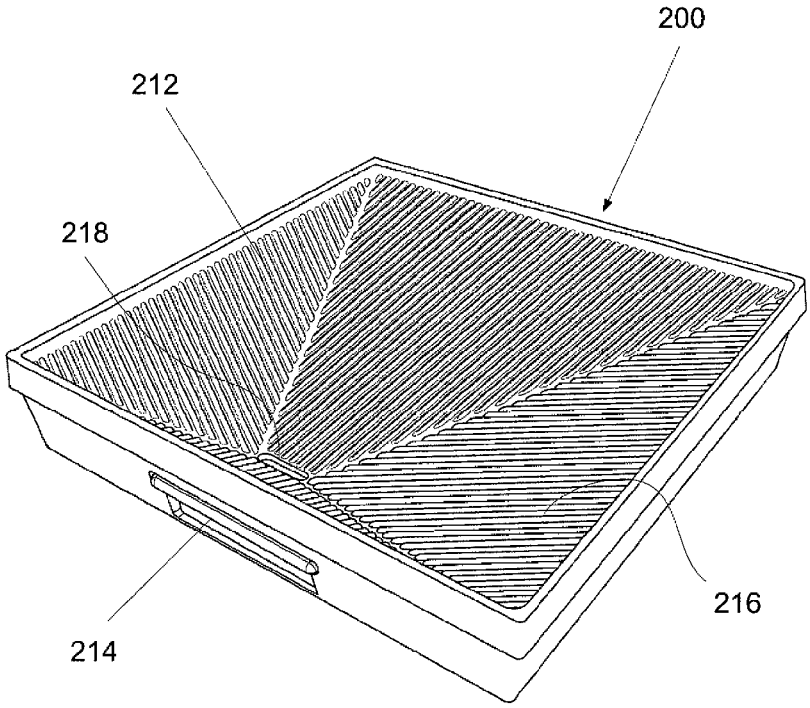
12 Claims, 13 Drawing Sheets