350-3.75 SR
6/26/79 XR 4,159,417

United States Patent [19]
Rubincam

[11] **4,159,417**
[45] **Jun. 26, 1979**

[54] **ELECTRONIC BOOK**

[76] Inventor: **David P. Rubincam,** 6303 20th Ave., West Hyattsville, Md. 20782

[21] Appl. No.: **846,554**

[22] Filed: **Oct. 28, 1977**

[51] **Int. Cl.**[2] **G06F 15/20;** G06K 7/12; G08B 5/00; G02B 27/00

[52] **U.S. Cl.** ..... **235/375;** 235/457; 340/366 R; 350/3.75; 365/216; 353/27 R

[58] **Field of Search** ..... 235/457, 454; 360/216, 360/94, 108; 340/366 R, 366 A, 366 B; 350/3.69, 3.71, DIG. 1, 3.75; 250/329; 353/68, 71, 26 R, 27 R; 365/94, 216

[56] **References Cited**

U.S. PATENT DOCUMENTS

3,290,987 12/1966 James et al. 353/26
3,669,521 6/1972 Tait 365/216

Primary Examiner—Daryl W. Cook
Attorney, Agent, or Firm—Donald A. Kettlestrings

[57] **ABSTRACT**

The contents of a book, magazine or the like are digitally encoded onto a memory, and the memory is removably insertable into a portable book-like apparatus whereby the encoded information can be displayed on a screen of the apparatus.
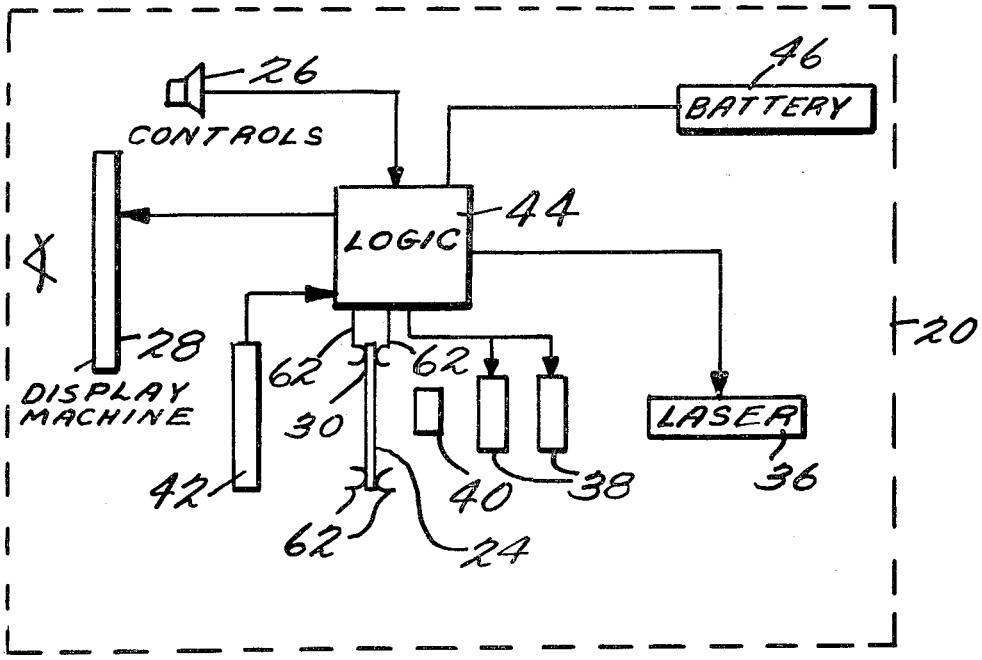
14 Claims, 10 Drawing Figures