United States Patent [19]

Carau, Sr. et al.

[11] **4,255,617**

[45] **Mar. 10, 1981**

[54] **TRAVELLING WAVE DIGITIZER**

[75] Inventors: **Frank P. Carau, Sr.; Henry T. Hetzel; Michael A. Tremblay,** all of Loveland, Colo.

[73] Assignee: **Hewlett-Packard Company,** Palo Alto, Calif.

[21] Appl. No.: **69,956**

[22] Filed: **Aug. 27, 1979**

Related U.S. Application Data

[63] Continuation of Ser. No. 944,931, Sep. 22, 1978, abandoned.

[51] **Int. Cl.**[3] **G08C 21/00**

[52] **U.S. Cl.** ..... **178/19;** 178/18; 340/347 AD

[58] **Field of Search** ..... 364/520; 340/709, 146.3 SY, 340/347 AD, 347 CC; 178/18, 19, 20; 33/1 M, 1 P, 1 HH; 346/139 C; 371/1

[56] **References Cited**

U.S. PATENT DOCUMENTS

3,342,935	9/1967	Leifer et al.	178/19
3,732,369	5/1973	Cotter	178/19
3,735,044	5/1973	Centner et al.	178/19
3,865,977	2/1975	Hiraki et al.	178/19
3,875,331	4/1975	Hasenbalg	178/19
3,904,822	9/1975	Kamm et al.	178/19
3,921,165	11/1975	Dym	178/19
3,975,592	8/1976	Carvey	178/19
4,018,989	4/1977	Snyder et al.	178/19
4,054,746	10/1977	Kamm	178/19
4,080,515	3/1978	Anderson	178/19
4,081,603	3/1978	Davis et al.	178/19
4,088,842	5/1978	Ikedo	178/19
4,181,952	1/1980	Casey et al.	178/19

Primary Examiner—Thomas A. Robinson
Attorney, Agent, or Firm—Edward L. Miller

[57] **ABSTRACT**

A digitizer shifts long and short wavelength square waves across x and y grids in a platen to perform upon a cursor signal time measurements that represent coarse and fine cursor position data. The periodic staircase cursor signal is filtered before use to permit time measurements that resolve cursor positions to locations between lines in the grids. The contribution of the filter to the coarse and fine time measurements is obtained in a special reference measurement, so that it may be removed. A processor combines these data into Cartesian coordinates, and implements procedures for error reduction. These include averaging of consecutive time measurements, dynamic adjustment of a timing reference to remove ambiguities inherent in measuring very small or very large cyclic quantities, and correction of coordinates for the effects of cursor motion during measurement and for any non-perpendicularity of the x and y grids.
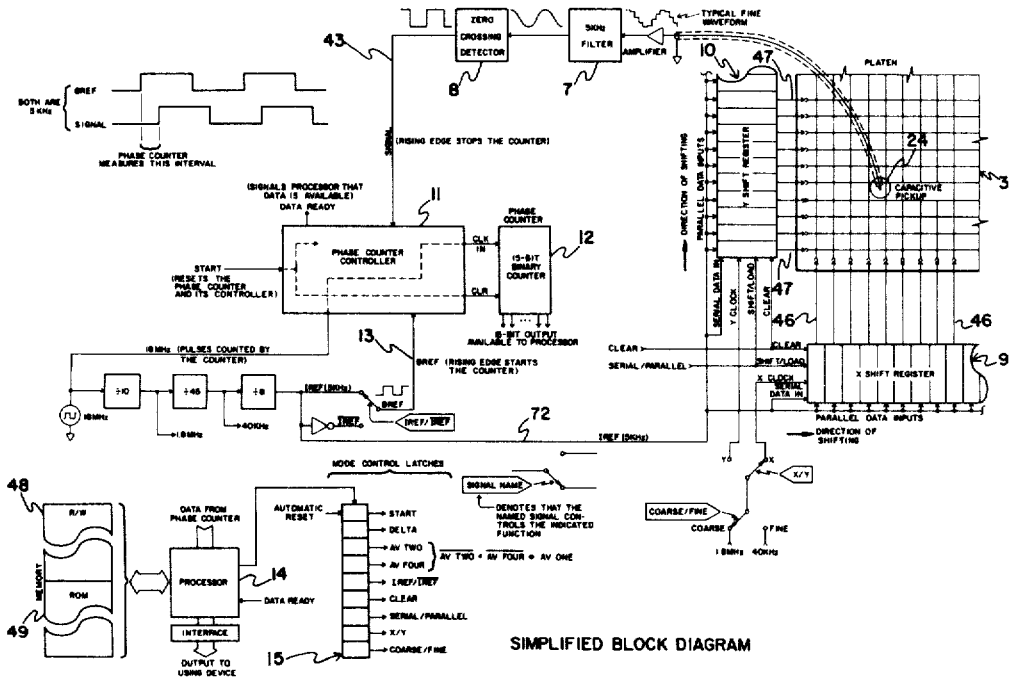
54 Claims, 39 Drawing Figures