US009044317B2

(12) **United States Patent**
Hildebrand et al.

(10) **Patent No.: US 9,044,317 B2**
(45) **Date of Patent: *Jun. 2, 2015**

(54) **INTRAOCULAR LENS DELIVERY DEVICES AND METHODS OF USE**

(71) Applicant: **PowerVision, Inc.**, Belmont, CA (US)

(72) Inventors: **Daniel Hildebrand**, San Francisco, CA (US); **Claudio Argento**, Los Gatos, CA (US); **Gregory V. Matthews**, San Francisco, CA (US)

(73) Assignee: **PowerVision, Inc.**, Belmont, CA (US)

(*) Notice: Subject to any disclaimer, the term of this patent is extended or adjusted under 35 U.S.C. 154(b) by 0 days.

This patent is subject to a terminal disclaimer.

(21) Appl. No.: **14/163,794**

(22) Filed: **Jan. 24, 2014**

(65) **Prior Publication Data**

US 2014/0142588 A1 May 22, 2014

Related U.S. Application Data

(63) Continuation of application No. 13/180,427, filed on Jul. 11, 2011, now Pat. No. 8,668,734.

(60) Provisional application No. 61/363,155, filed on Jul. 9, 2010.

(51) **Int. Cl.**
A61F 2/16 (2006.01)

(52) **U.S. Cl.**
CPC ***A61F 2/1678*** (2013.01); ***A61F 2/1672*** (2013.01)

(58) **Field of Classification Search**
CPC ... A61F 2/1664; A61F 2/1678; A61F 2/1672; A61F 2/1662
USPC 606/107; 623/6.11, 6.12
See application file for complete search history.

(56) **References Cited**

U.S. PATENT DOCUMENTS

4,111,995	A	9/1978	Nelson
4,251,887	A	2/1981	Anis
4,253,199	A	3/1981	Banko
4,254,509	A	3/1981	Tennant
4,304,895	A	12/1981	Loshaek
4,373,218	A	2/1983	Schachar
4,409,691	A	10/1983	Levy
4,423,809	A	1/1984	Mazzocco
4,435,856	A	3/1984	L'Esperance
4,466,705	A	8/1984	Michelson
4,490,860	A	1/1985	Rainin
4,494,254	A	1/1985	Lopez
4,512,040	A	4/1985	McClure
4,528,311	A	7/1985	Beard et al.
4,575,373	A	3/1986	Johnson

(Continued)

FOREIGN PATENT DOCUMENTS

CN	101277659	A	10/2008
EP	0898972	A2	3/1999

(Continued)

OTHER PUBLICATIONS

Baughman et al., "Negative poisson's ratios for extreme states of matter," Science, vol. 288, pp. 2018-2022, Jun. 16, 2000.

(Continued)

Primary Examiner — Jonathan W Miles

(74) *Attorney, Agent, or Firm* — Shay Glenn LLP

(57) **ABSTRACT**

Intraocular lens delivery devices and methods of use.
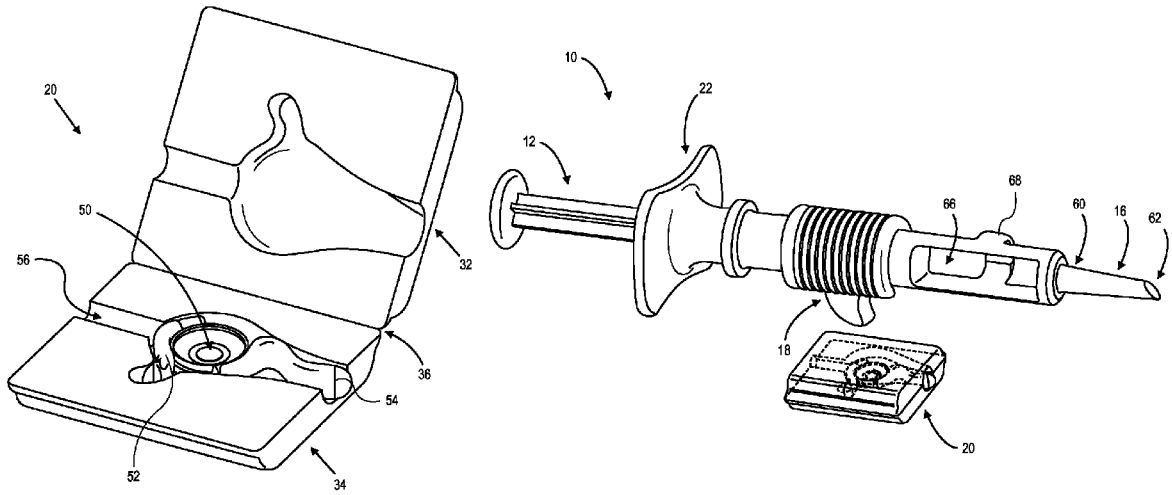
16 Claims, 11 Drawing Sheets