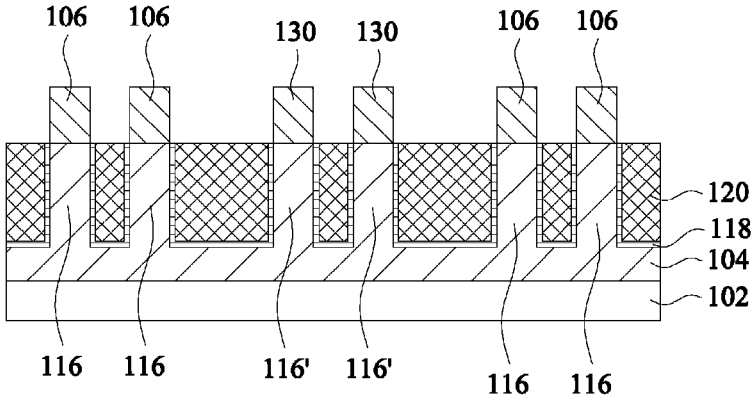

Figure 16

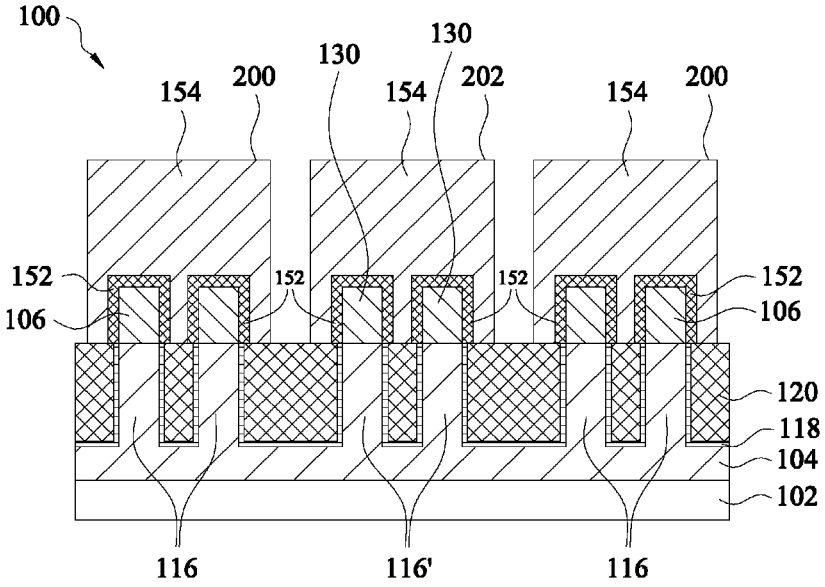

Figure 17