US009636217B2

(12) **United States Patent**
Kunte

(10) **Patent No.: US 9,636,217 B2**
(45) **Date of Patent: May 2, 2017**

(54) **EQUIPMENT AND METHODS USED IN FOLDING AND IMPLANTING FOLDABLE LENSES IN THE EYE**

(71) Applicant: **Novartis AG**, Basel (CH)

(72) Inventor: **Neelesh Kunte**, Arlington, TX (US)

(73) Assignee: **Novartis AG**, Basel (CH)

(*) Notice: Subject to any disclaimer, the term of this patent is extended or adjusted under 35 U.S.C. 154(b) by 223 days.

(21) Appl. No.: **14/273,279**

(22) Filed: **May 8, 2014**

(65) **Prior Publication Data**

US 2015/0320593 A1 Nov. 12, 2015

(51) **Int. Cl.**
A61F 9/007 (2006.01)
A61F 2/16 (2006.01)

(52) **U.S. Cl.**
CPC ***A61F 2/1678*** (2013.01); ***A61F 2/1662*** (2013.01); *A61F 2/1691* (2013.01)

(58) **Field of Classification Search**
CPC A61F 9/00; A61F 9/007; A61F 9/00736; A61F 2/1662–2/1678; A61F 2/169; A61F 2/16–2/18
See application file for complete search history.

(56) **References Cited**

U.S. PATENT DOCUMENTS

4,747,404 A 5/1988 Jampel et al.
4,819,631 A 4/1989 Poley
5,304,182 A 4/1994 Rheinish et al.
5,354,333 A 10/1994 Kammann et al.
5,468,246 A 11/1995 Blake
5,653,753 A 8/1997 Brady et al.
5,702,400 A 12/1997 Brown et al.
5,702,402 A 12/1997 Brady
5,711,317 A 1/1998 McDonald
5,772,667 A * 6/1998 Blake A61F 2/1662 606/107
6,283,976 B1 9/2001 Portney
6,334,862 B1 1/2002 Vidal et al.
6,336,932 B1 1/2002 Figueroa et al.
6,355,046 B2 3/2002 Kikuchi et al.
6,371,960 B2 4/2002 Heyman et al.
6,428,545 B2 8/2002 Portney
6,500,181 B1 12/2002 Portney
6,786,911 B2 9/2004 Mitomo et al.
7,074,227 B2 7/2006 Portney
7,104,996 B2 9/2006 Bonutti
7,422,604 B2 9/2008 Vaquero et al.
(Continued)

OTHER PUBLICATIONS

International Search Report and Written Opinion of the International Searching Authority for PCT/US2015/029859, 6 pages, dated Aug. 10, 2015.

Primary Examiner — Shaun L David
(74) *Attorney, Agent, or Firm* — Darien Reddick

(57) **ABSTRACT**

Apparatuses, systems, and methods for folding an intraocular lens and inserting an intraocular lens into an eye are disclosed herein. In some instances, a system for folding an intraocular lens may include a folding pin, a guide pin rotatable about a longitudinal axis of the folding pin, and a stage laterally moveable relative to the folding pin. An intraocular lens may be secured between the folding pin and the guide pin and be folded onto the folding pin during rotation of the guide pin. A retention member may be used to hold the folded intraocular lens onto the folding pin.
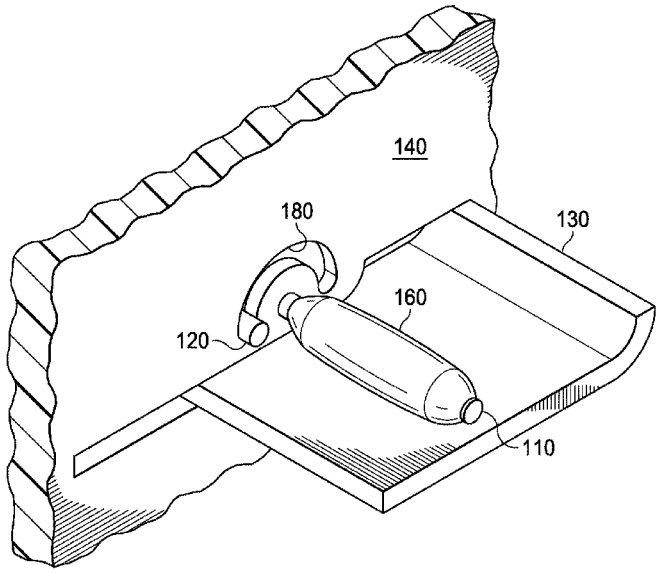
8 Claims, 6 Drawing Sheets