Mar. 3, 1925. 1,528,717

R. WILLIAMS

CAPONIZING INSTRUMENT

Filed March 17, 1924

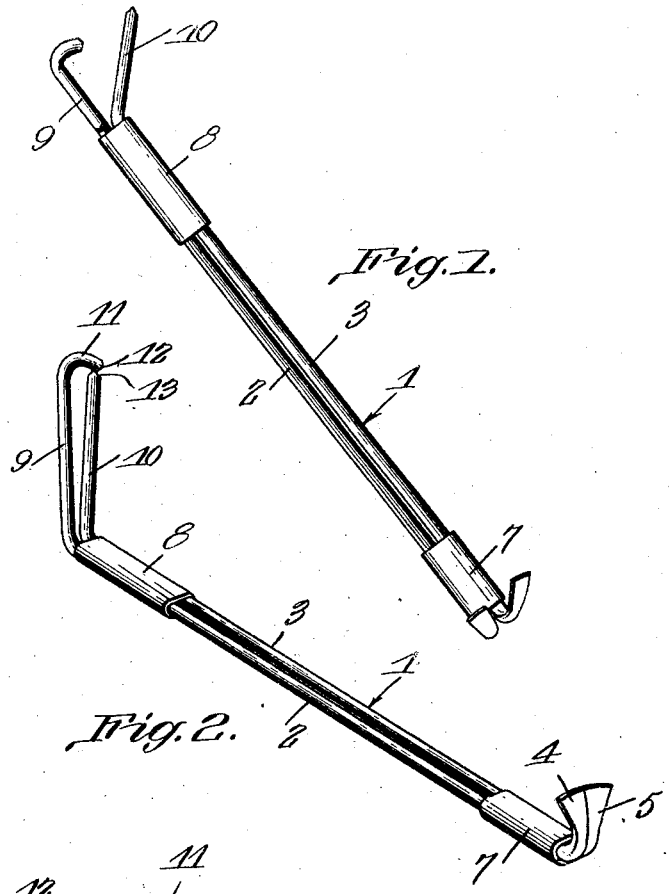

Fig. 1.

Fig. 2.

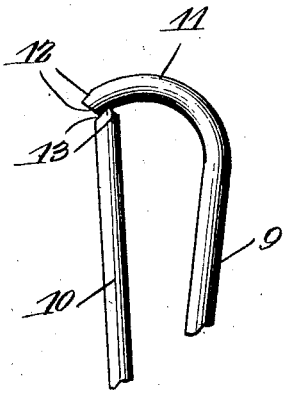

Fig. 3.

R. Williams, Inventor

By C. A. Snow & Co.
Attorneys.