US009121817B1

(12) **United States Patent**
Roach et al.

(10) **Patent No.: US 9,121,817 B1**
(45) **Date of Patent: Sep. 1, 2015**

(54) **ULTRASONIC TESTING DEVICE HAVING AN ADJUSTABLE WATER COLUMN**

(75) Inventors: **Dennis P. Roach**, Albuquerque, NM (US); **Stephen O. Neidigk**, Albuquerque, NM (US); **Kirk A. Rackow**, Albuquerque, NM (US); **Randy L. Duvall**, Albuquerque, NM (US)

(73) Assignee: **Sandia Corporation**, Albuquerque, NM (US)

(*) Notice: Subject to any disclaimer, the term of this patent is extended or adjusted under 35 U.S.C. 154(b) by 381 days.

(21) Appl. No.: **13/544,177**

(22) Filed: **Jul. 9, 2012**

Related U.S. Application Data

(60) Provisional application No. 61/660,264, filed on Jun. 15, 2012.

(51) **Int. Cl.**
G01N 29/28 (2006.01)

(52) **U.S. Cl.**
CPC ***G01N 29/28*** (2013.01)

(58) **Field of Classification Search**
CPC G01N 29/28; G01N 29/24; G01N 29/227; G01N 29/228; G01N 29/2468
USPC 73/644, 633
See application file for complete search history.

(56) **References Cited**

U.S. PATENT DOCUMENTS

3,555,891	A *	1/1971	Lewis	73/644
3,946,599	A *	3/1976	Patt	73/644
4,033,178	A *	7/1977	Holt et al.	73/644
4,183,249	A	1/1980	Anderson	
4,472,975	A	9/1984	Beck et al.	
5,060,201	A	10/1991	Ishikawa et al.	
5,343,109	A	8/1994	Mockl	
5,469,744	A	11/1995	Patton et al.	
5,494,038	A	2/1996	Wang et al.	
5,729,508	A	3/1998	Baker et al.	
5,814,731	A	9/1998	Alexander et al.	
6,298,727	B1	10/2001	Fleming et al.	
6,481,190	B2	11/2002	Van Zanten et al.	
6,733,457	B2	5/2004	Flesch et al.	
6,948,369	B2	9/2005	Fleming et al.	
7,284,434	B1	10/2007	Fleming	
7,311,679	B2	12/2007	Desilets et al.	
7,694,569	B2	4/2010	McGrath et al.	
7,926,344	B1	4/2011	Hyde et al.	
2003/0192382	A1 *	10/2003	Mueller	73/620

OTHER PUBLICATIONS

Hsu, D.K., et al., "Detection and imaging of corrosion around wing skin fasteners using the dripless bubbler ultrasonic scanner," SPIE vol. 3397, (1998), pp. 32-38.

Hsu, D.K., et al., Nondestructive Evaluation of Repairs on Aircraft Composite Structures, SPIE vol. 4336, (2001), pp. 100-107.

* cited by examiner

Primary Examiner — Laura Martin
Assistant Examiner — Rose M Miller
(74) *Attorney, Agent, or Firm* — Daniel J. Jenkins

(57) **ABSTRACT**

An ultrasonic testing device having a variable fluid column height is disclosed. An operator is able to adjust the fluid column height in real time during an inspection to to produce optimum ultrasonic focus and separate extraneous, unwanted UT signals from those stemming from the area of interest.
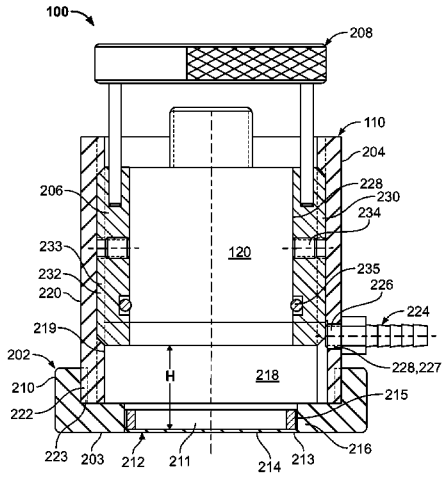
10 Claims, 9 Drawing Sheets