US005913317A

United States Patent [19]

Tiram

[11] **Patent Number: 5,913,317**

[45] **Date of Patent: Jun. 22, 1999**

[54] **CLIP-ON MIRROR FOR SHAVING DEVICE**

[76] Inventor: **Aaron Tiram**, Ecoco, Inc., 1830 N. Lamon, Chicago, Ill. 60639

[21] Appl. No.: **08/881,976**

[22] Filed: **Jun. 25, 1997**

[51] **Int. Cl.**[6] **A45D 27/22**; A45D 42/08

[52] **U.S. Cl.** **132/291**; 132/292; 132/289; 132/316; 30/34.05; 30/537

[58] **Field of Search** 132/291, 292, 132/289, 316; 30/34.05, 123, 526, 537; D28/44, 45, 48

[56] **References Cited**

U.S. PATENT DOCUMENTS

1,676,183	7/1928	Garfunkle	30/34.05
2,341,743	2/1944	Rothner	30/34.05
3,043,996	7/1962	Hartwig et al.	30/34.05
4,733,468	3/1988	Zadro	30/34.05
4,888,868	12/1989	Pritchard	132/289
5,692,529	12/1997	Fekete	132/291

Primary Examiner—Gene Mancene
Assistant Examiner—Pedro Philogene
Attorney, Agent, or Firm—Laff, Whitesel, Conte & Saret, Ltd.

[57] **ABSTRACT**

A clip-on mirror for a shaving device of the type having a body member with a cutting head at one end, wherein the clip-on mirror includes a mirror, and attachment mechanism for removably attaching the mirror to the shaving device. The shaving device may be electric or a straight edge razor.
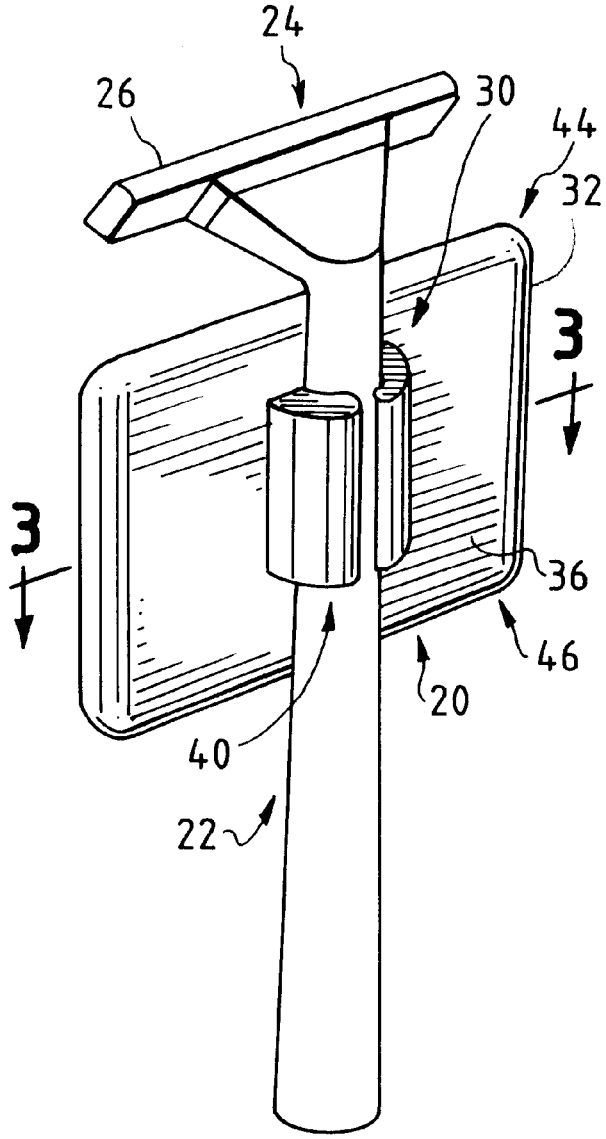
24 Claims, 4 Drawing Sheets