US009410517B2

(12) **United States Patent**
Fiedler

(10) **Patent No.: US 9,410,517 B2**
(45) **Date of Patent: Aug. 9, 2016**

(54) **FUEL LINE**

(71) Applicant: **TI Automotive (Heidelberg) GmbH**, Heidelberg (DE)

(72) Inventor: **Uwe Fiedler**, Altlußheim (DE)

(73) Assignee: **TI Automotive (Heidelberg) GmbH**, Heidelberg (DE)

(*) Notice: Subject to any disclaimer, the term of this patent is extended or adjusted under 35 U.S.C. 154(b) by 107 days.

(21) Appl. No.: **14/092,041**

(22) Filed: **Nov. 27, 2013**

(65) **Prior Publication Data**

US 2014/0144409 A1 May 29, 2014

(30) **Foreign Application Priority Data**

Nov. 28, 2012 (EP) 12194581

(51) **Int. Cl.**

F02M 55/02	(2006.01)
F16L 11/00	(2006.01)
F02M 37/00	(2006.01)
F02M 55/00	(2006.01)
F02M 69/46	(2006.01)
F16L 9/02	(2006.01)
F16L 9/04	(2006.01)

(52) **U.S. Cl.**

CPC ***F02M 55/02*** (2013.01); ***F02M 37/0017*** (2013.01); ***F02M 55/00*** (2013.01); ***F02M 69/462*** (2013.01); *F16L 9/02* (2013.01); *F16L 9/04* (2013.01)

(58) **Field of Classification Search**

CPC F02M 55/02; F02M 37/0017; F16L 9/20
USPC 123/468, 469, 514, 516; 138/142, 143, 138/471, 151, 140, 137
See application file for complete search history.

(56) **References Cited**

U.S. PATENT DOCUMENTS

5,076,242 A * 12/1991 Parker F02M 55/007 123/468
5,458,156 A * 10/1995 Okubo C22C 38/40 138/140
5,685,344 A * 11/1997 Iorio B29C 63/486 138/140
5,887,628 A * 3/1999 Usui F16L 9/04 138/142

(Continued)

FOREIGN PATENT DOCUMENTS

GB	2 265 961 A	10/1993
GB	2 312 486 A	10/1997
JP	11 044277 A	2/1999

OTHER PUBLICATIONS

European Patent Office, International Search Report in European Patent Application No. 12 19 4581 Feb. 14, 2013.

Primary Examiner — Lindsay Low
Assistant Examiner — Long T Tran
(74) *Attorney, Agent, or Firm* — Brinks Gilson & Lione

(57) **ABSTRACT**

A fuel line, in particular a fuel line for a gasoline direct injection line system, having an inner steel tube and an outer steel tube, wherein the inner steel tube is accommodated in the outer steel tube in a force-locking manner. The inner steel tube is made of a corrosion resistant steel and the outer steel tube is made of an outer steel tube alloy, wherein a wall thickness of the inner steel tube is smaller than a wall thickness of the outer steel tube. A maximum carbon content of the outer steel tube alloy is higher than a maximum carbon content of the corrosion resistant steel. A thickness of the fuel line amounts to between 5% and 60% of an inner diameter of the motor vehicle fluid line.
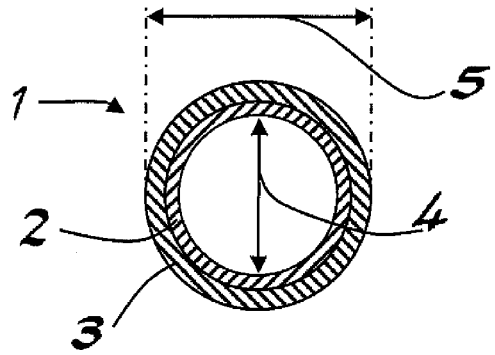
15 Claims, 1 Drawing Sheet