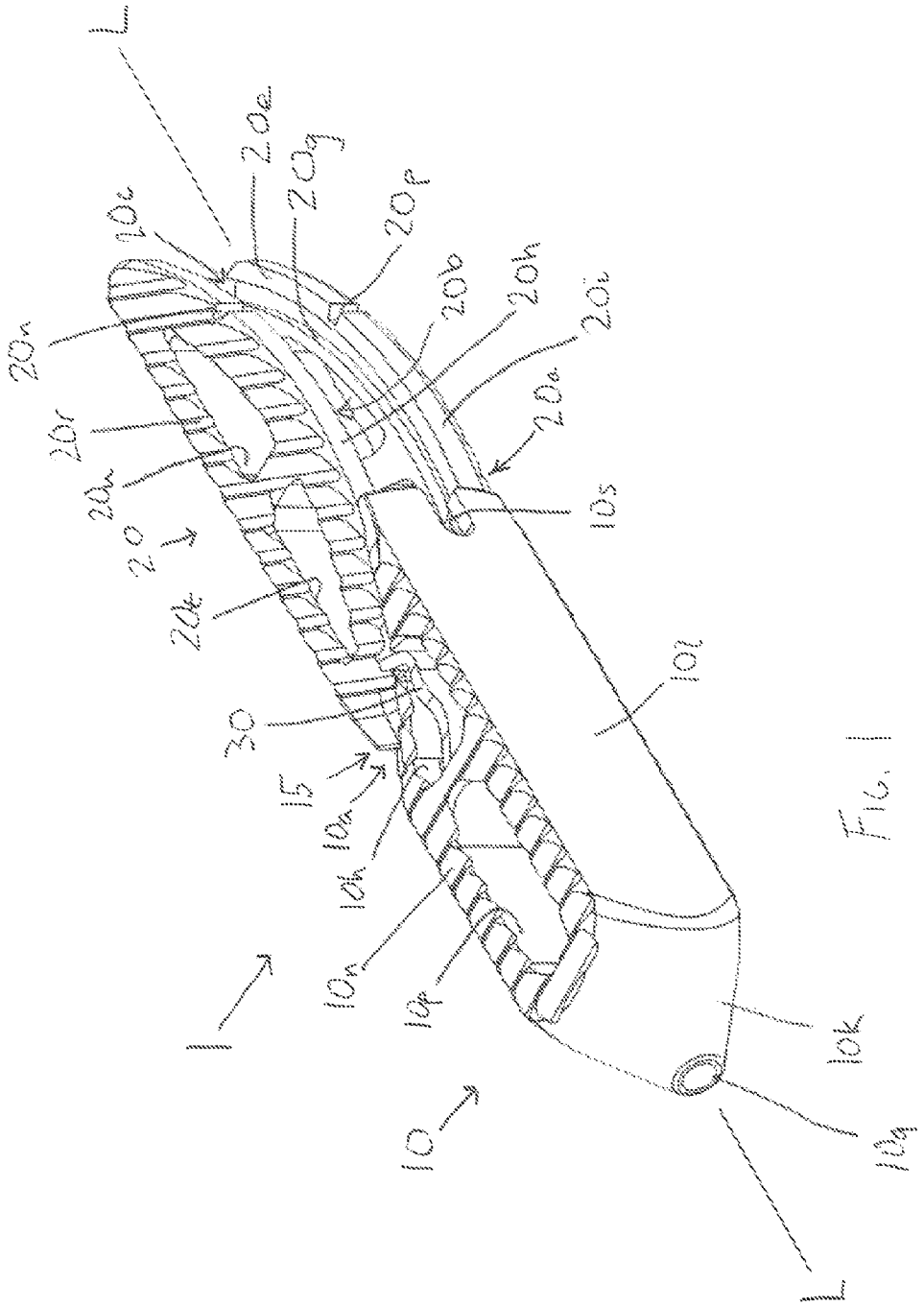
L
20e
20g
20p
20c
20n
20b
20h
20i
20r
20a
20u
20
10s
20t
10l
30
15
10a
10h
10n
10p
1
10k
10
10g
L

FIG. 1