US010000117B2

(12) **United States Patent**
Giles et al.

(10) **Patent No.: US 10,000,117 B2**
(45) **Date of Patent: Jun. 19, 2018**

(54) **FILLER NECK CLOSURE ASSEMBLY**

(71) Applicant: **Stant USA Corp.**, Connersville, IN (US)

(72) Inventors: **David A. Giles**, Connversville, IN (US); **Michael S. Brock**, Connersville, IN (US); **Kevin L. Young**, Connersville, IN (US)

(73) Assignee: **Stant USA Corp.**, Connersville, IN (US)

(*) Notice: Subject to any disclaimer, the term of this patent is extended or adjusted under 35 U.S.C. 154(b) by 0 days. days.

(21) Appl. No.: **15/412,444**

(22) Filed: **Jan. 23, 2017**

(65) **Prior Publication Data**

US 2017/0158048 A1 Jun. 8, 2017

Related U.S. Application Data

(60) Provisional application No. 62/286,137, filed on Jan. 22, 2016.

(51) **Int. Cl.**
B60K 15/04 (2006.01)
B67D 7/42 (2010.01)

(52) **U.S. Cl.**
CPC ***B60K 15/04*** (2013.01); ***B67D 7/42*** (2013.01); *B60K 2015/0461* (2013.01); *B60K 2015/0477* (2013.01)

(58) **Field of Classification Search**
CPC B60K 15/04; B60K 2015/0461; B60K 2015/0477; B67D 7/42
USPC 701/36
See application file for complete search history.

(56) **References Cited**

U.S. PATENT DOCUMENTS

765,493	A	7/1904	Koscinski	
2,145,758	A	1/1939	Fellows et al.	
2,206,948	A	7/1940	Frankford	
3,133,741	A	5/1964	Garabello	
3,481,506	A	12/1969	Ihlenfeld et al.	
3,730,216	A	5/1973	Arnett et al.	
4,034,784	A	7/1977	Ball et al.	
4,248,279	A	2/1981	Warmbold	
4,526,216	A	7/1985	Lake, Jr.	
4,687,034	A	8/1987	Graiff et al.	
5,056,570	A *	10/1991	Harris	B60K 15/03519 141/302
5,145,081	A	9/1992	Gravino	
5,212,864	A	5/1993	Bates et al.	
5,271,438	A *	12/1993	Griffin	B60K 15/04 141/302

(Continued)

FOREIGN PATENT DOCUMENTS

DE	1712398 U	12/1955
DE	4039269 C1	2/1992

(Continued)

OTHER PUBLICATIONS

US 8,511,353, 08/2013, Hagano (withdrawn)

Primary Examiner — Tyler J Lee
(74) *Attorney, Agent, or Firm* — Barnes & Thornburg LLP

(57) **ABSTRACT**

A capless filler neck closure for use with a vehicle fuel tank filler neck is disclosed. The capless filler neck closure includes an outer dust cover and an inner closure door each movable from a closed position to an opened position in response to insertion of a fuel nozzle into the capless filler neck closure for refueling of an associated vehicle fuel tank.
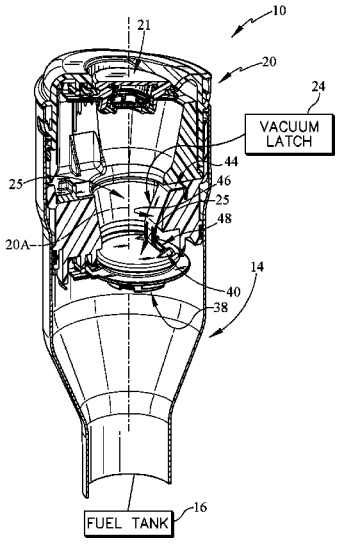
19 Claims, 6 Drawing Sheets