US005297216A

United States Patent [19]

Sklarew

[11] Patent Number: 5,297,216

[45] Date of Patent: Mar. 22, 1994

[54] HANDWRITTEN KEYBOARDLESS ENTRY COMPUTER SYSTEM

[76] Inventor: Ralph Sklarew, 2004 Turtle Pond Dr., Reston, Va. 22091

[21] Appl. No.: 775,167

[22] Filed: Oct. 11, 1991

Related U.S. Application Data

[60] Division of Ser. No. 523,447, May 14, 1990, Pat. No. 5,157,737, which is a continuation of Ser. No. 29,772, Mar. 24, 1987, Pat. No. 4,972,496, which is a continuation-in-part of Ser. No. 889,513, Jul. 25, 1986, abandoned.

[51] Int. Cl.[5] G06K 9/00

[52] U.S. Cl. 382/13; 382/59

[58] Field of Search 382/13, 59

[56] **References Cited**

U.S. PATENT DOCUMENTS

3,248,705	4/1966	Dammann etal.	364/900
3,308,253	3/1967	Krakinowski	364/900
3,487,371	12/1969	Frank	382/13
3,530,437	9/1970	Booker, Jr. et al.	178/18
3,699,439	10/1972	Turner	178/18
3,760,373	4/1973	Bartz	364/900
3,761,877	9/1973	Fernald	382/13
3,832,693	8/1974	Ishizaki et al.	364/900
3,868,636	2/1975	Schlang	382/18
3,872,462	3/1975	Lemelson	390/708
3,903,517	9/1975	Hafner	382/57
3,916,099	10/1975	Hlady	200/46
3,932,859	1/1976	Kyriakides	340/324 R
4,016,542	4/1977	Azure	364/900
4,055,726	10/1977	Turner et al.	178/18
4,071,691	1/1978	Pepper, Jr.	178/19
4,112,415	9/1978	Hilbrink	382/13
4,129,747	12/1978	Pepper, Jr.	178/19
4,159,417	6/1979	Rubican	235/375
4,177,354	12/1979	Mathews	178/18
4,177,448	12/1979	Brayton	382/14
4,184,147	1/1980	Seelbach	382/13
4,195,353	3/1980	Abe et al.	364/900
4,198,539	4/1980	Pepper, Jr.	178/18
4,218,760	8/1980	Levy	364/900
4,262,281	4/1981	Buckle et al.	382/13
4,293,734	10/1981	Pepper, Jr.	178/18
4,302,011	11/1981	Pepper, Jr.	178/19
4,318,096	3/1982	Thornburg et al.	340/706
4,353,552	10/1982	Pepper, Jr.	273/313
4,365,235	12/1982	Greanias	382/13
4,371,746	2/1983	Pepper, Jr.	178/18
4,386,232	5/1983	Slater	178/18
4,419,661	12/1983	Hetsugi	340/707
4,430,917	2/1984	Pepper, Jr.	84/127
4,456,787	6/1984	Schlosser et al.	178/19
4,475,239	10/1984	van Raamadonk	382/57

(List continued on next page.)

FOREIGN PATENT DOCUMENTS

1108764 5/1978 Canada .

(List continued on next page.)

OTHER PUBLICATIONS

Coleman, M., "Text Editing on a Graphic Display Device using Hand-Drawn Proofreader's Symbols", *Pertinent Concepts in Computer Graphics*, 1969.

(List continued on next page.)

Primary Examiner—Leo H. Boudreau

Attorney, Agent, or Firm—Townsend and Townsend

[57] **ABSTRACT**

A keyboardless entry computer system includes a transparent input screen that generates positional information when contacted by a stylus, and a display screen mounted physically below the input screen such that a character that is displayed can be seen below the input screen. The system includes a computer that has been programmed to compile the positional information into Strokes, to calculate Stroke characteristics, and then compare the Stroke characteristics with those stored in a database in order to recognize the symbol drawn by the stylus. Key features of the system are: (1) transparent position sensing subsystem; (2) underlying display on which to mimic drawing of sensed positions and to show characters or symbols; (3) means to convert sensed positions first into plotted Points and then into recognized characters or symbols; and (4) means to "learn" to associate sensed input positions with a character or symbol.
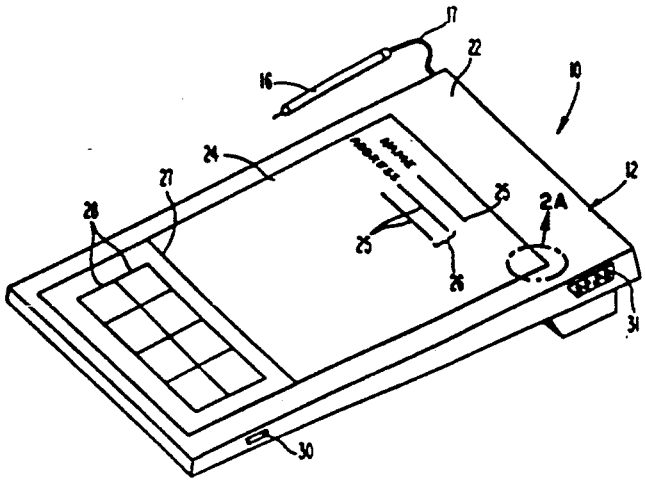
16 Claims, 16 Drawing Sheets