US006693516B1

(12) **United States Patent**
Hayward

(10) **Patent No.: US 6,693,516 B1**
(45) **Date of Patent: Feb. 17, 2004**

(54) **ELECTRO-MECHANICAL TRANSDUCER SUITABLE FOR TACTILE DISPLAY AND ARTICLE CONVEYANCE**

(76) Inventor: **Vincent Hayward**, 2277 Harvard, Montreal, Quebec (CA), H4A 2W1

(*) Notice: Subject to any disclaimer, the term of this patent is extended or adjusted under 35 U.S.C. 154(b) by 0 days.

(21) Appl. No.: **09/568,024**

(22) Filed: **May 10, 2000**

(51) **Int. Cl.**[7] **H04B 3/36**

(52) **U.S. Cl.** **340/407.1**; 340/825.19; 340/407.2; 434/113; 434/114

(58) **Field of Search** 340/407.1, 825.19, 340/407.2, 965; 345/103; 434/112, 113, 114; 341/20, 21, 27, 22, 34

(56) **References Cited**

U.S. PATENT DOCUMENTS

4,833,776 A * 5/1989 Wakamiya et al. 29/837
5,449,292 A * 9/1995 Tani et al. 434/114
5,466,154 A * 11/1995 Thompson 434/114
5,467,975 A 11/1995 Hadimioglu et al. 271/267
5,489,812 A 2/1996 Furuhata et al. 310/309
5,580,251 A 12/1996 Gilkes et al. 434/113
5,685,721 A * 11/1997 Decker 434/114
5,717,423 A * 2/1998 Parker 345/108
5,810,843 A * 9/1998 Iwasaki et al. 606/133
5,979,892 A 11/1999 Smith 271/267
6,022,220 A * 2/2000 Haugen 434/112

FOREIGN PATENT DOCUMENTS

JP 07096016 4/1995
WO WO 98 32112 7/1998

* cited by examiner

Primary Examiner—Benjamin C. Lee
(74) *Attorney, Agent, or Firm*—David J. French

(57) **ABSTRACT**

A tactile transducer is able to provide a tactile display or serve as a tactile input sensor. Paired contactors having contactor tips separated by a gap are connected to transducer means (an actuator or sensor). Variations in the gap distance can create a tactile experience through skin stretch, or provide tactile input in sensor mode.
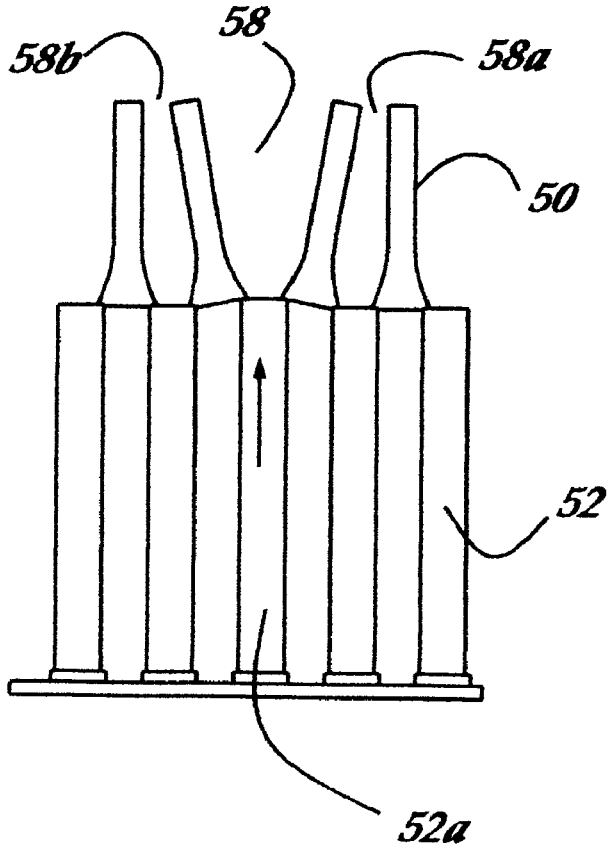
14 Claims, 17 Drawing Sheets