US008787016B2

(12) **United States Patent**
Rothkopf et al.

(10) **Patent No.: US 8,787,016 B2**
(45) **Date of Patent: Jul. 22, 2014**

(54) **FLEXIBLE DISPLAY DEVICES**

(75) Inventors: **Fletcher R. Rothkopf**, Los Altos, CA (US); **Andrew J. M. Janis**, Toronto (CA); **Teodor Dabov**, San Francisco, CA (US)

(73) Assignee: **Apple Inc.**, Cupertino, CA (US)

(*) Notice: Subject to any disclaimer, the term of this patent is extended or adjusted under 35 U.S.C. 154(b) by 380 days.

(21) Appl. No.: **13/177,165**

(22) Filed: **Jul. 6, 2011**

(65) **Prior Publication Data**

US 2013/0010405 A1 Jan. 10, 2013

(51) **Int. Cl.**
G06F 1/16 (2006.01)

(52) **U.S. Cl.**
USPC **361/679.55**; 361/679.02; 361/679.3; 361/679.21; 361/679.56; 455/575.1; 455/575.3; 455/575.4

(58) **Field of Classification Search**
None
See application file for complete search history.

(56) **References Cited**

U.S. PATENT DOCUMENTS

4,066,855	A	1/1978	Zenk	
4,085,302	A	4/1978	Zenk et al.	
5,483,261	A	1/1996	Yasutake	
5,488,204	A	1/1996	Mead et al.	
5,825,352	A	10/1998	Bisset et al.	
5,835,079	A	11/1998	Shieh	
5,880,411	A	3/1999	Gillespie et al.	
5,898,600	A *	4/1999	Isashi	708/105
6,107,988	A	8/2000	Phillipps	
6,188,391	B1	2/2001	Seely et al.	
6,310,610	B1	10/2001	Beaton et al.	
6,323,846	B1	11/2001	Westerman et al.	
6,577,496	B1 *	6/2003	Gioscia et al.	361/679.3
6,690,387	B2	2/2004	Zimmerman et al.	
6,697,045	B2 *	2/2004	Min	345/156
6,803,245	B2	10/2004	Auch et al.	
7,015,894	B2	3/2006	Morohoshi	
7,034,913	B2	4/2006	Ishida	
7,184,064	B2	2/2007	Zimmerman et al.	
7,345,872	B2 *	3/2008	Wang	361/679.55

(Continued)

FOREIGN PATENT DOCUMENTS

JP	2000163031	6/2000
JP	2002342033	11/2002

OTHER PUBLICATIONS

Raff et al., U.S. Appl. No. 13/452,061, filed Apr. 20, 2012.
Myers et al., U.S. Appl. No. 13/108,256, filed May 16, 2011.

(Continued)

Primary Examiner — Anthony Q Edwards
(74) *Attorney, Agent, or Firm* — Treyz Law Group; G. Victor Treyz; Kendall P. Woodruff

(57) **ABSTRACT**

Electronic devices may be provided that contain multiple housing portions. The housing portions may be coupled together using hinges. The hinges may include hinges based on a three-bar linkage, hinges based on a four-bar linkage, hinges with slotted members, hinges formed from flexible support structures, and hinges based on flexible housing structures. Flexible displays may be mounted to the housing portions overlapping the hinges. When the housing portions in a device are rotated relative to each other, the flexible display may bend. The hinge may be configured to allow the flexible display to be placed in a front-to-front configuration in which an active side of the display faces itself or a back-to-back configuration. Engagement structures may be used to help the housing grip external objects and to hold the housing portions together. The hinges may be provided with rotational detents to help hold the flexible display in desired positions.
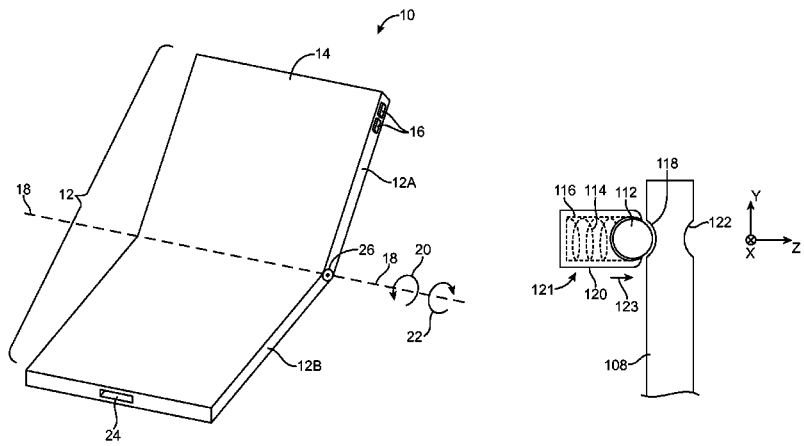
16 Claims, 18 Drawing Sheets