(No Model.)

2 Sheets—Sheet 1.

G. T. SAMPSON.

CLOTHES DRIER.

No. 476,416.

Patented June 7, 1892.

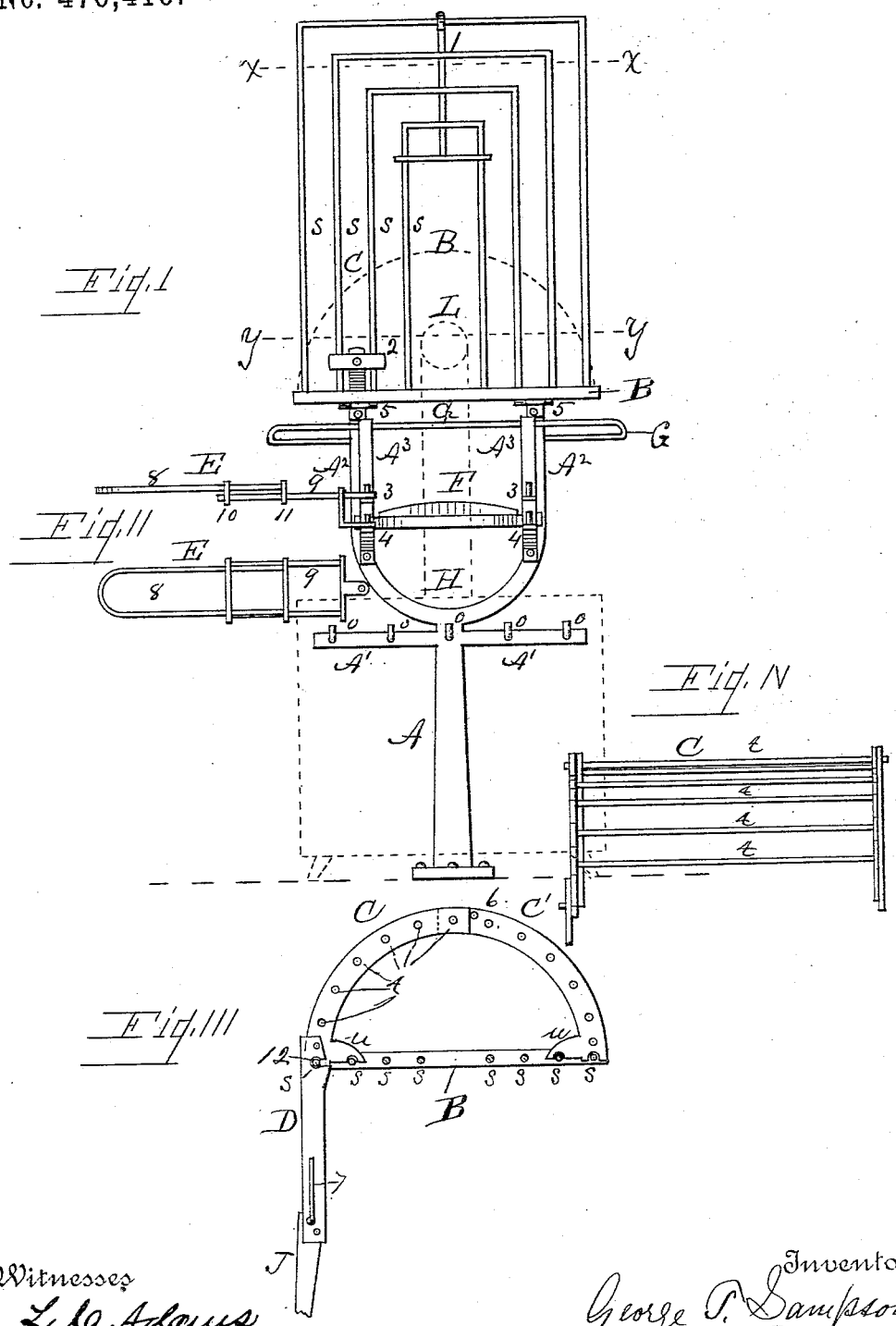

Witnesses
L. C. Adams
J. N. Winder

Inventor
George T. Sampson
By His Attorney B. Pickering

THE NORRIS PETERS CO., PHOTO-LITHO., WASHINGTON, D. C.