June 19, 1951 H. D. ALLEE 2,557,716

SAFETY HINGE

Filed Dec. 7, 1945

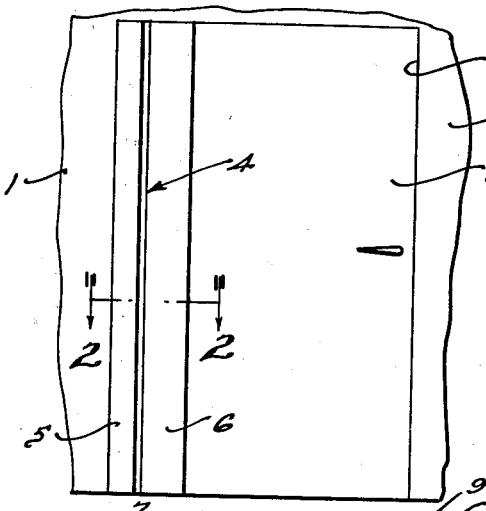

Fig. 1.

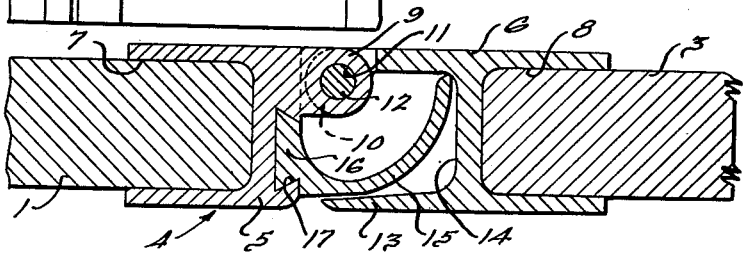

Fig. 2.

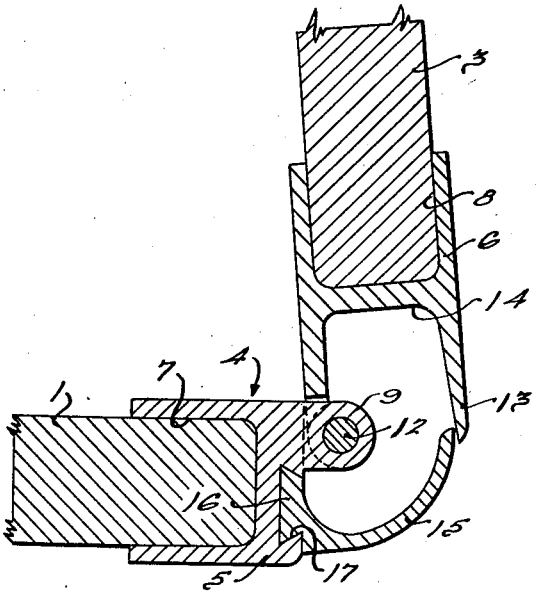

Fig. 3.

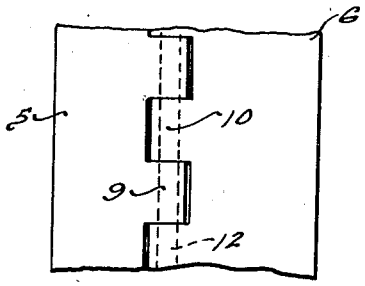

Fig. 4.

INVENTOR.
Herbert D. Allee.
BY
Harness, Dickey & Pierce.
ATTORNEYS.